MOTHER TONGUE

JOURNAL OF THE ASSOCIATION FOR THE STUDY OF LANGUAGE IN PREHISTORY

Issue VII, 2002

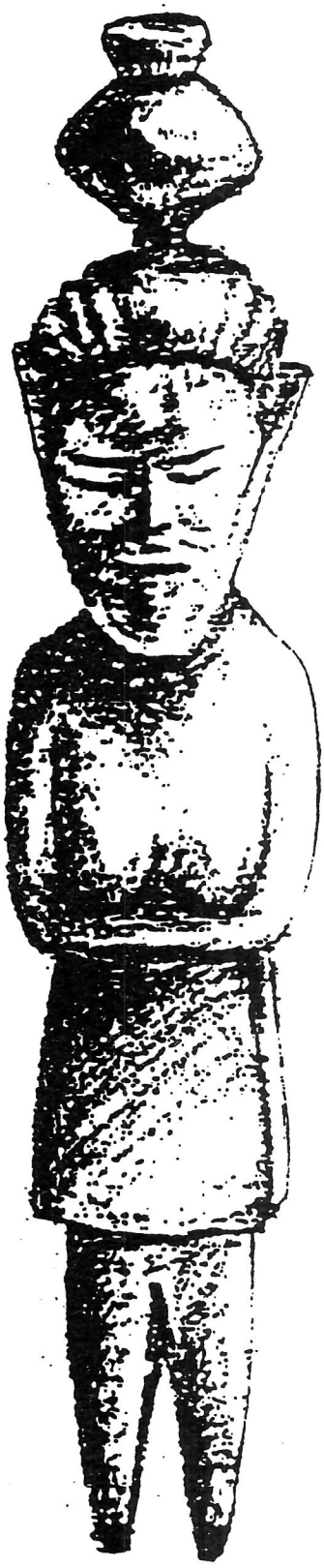

In Honor of Joseph H. Greenberg

CONTENTS

Introduction

Table: Taxonomic Proposals by Joseph H. Greenberg

Studies in Linguistic Classification

1 Shabo: A New African Phylum or a Special Relic of Old Nilo-Saharan??: *Harold C. Fleming*

39 Ongota Lexicon: English-Ongota: *Harold C. Fleming*

65 The Origin of the Tasmanian Languages: *Timothy Usher*

85 Reflections on Greenberg's *Indo-European and Its Closest Relatives: Allan R. Bomhard*

115 Basque Parallels to Greenberg's Grammatical Evidence for Eurasiatic: *Ronald W. Thornton*

Focus on Southwestern Asia

123 Elam: a Bridge between the Ancient Near East and Dravidian India?: *Václav Blažek*

145 Map: Near East (3000-2500 BC): The Distribution of Known Languages *Václav Blažek*

146 Figure: Elamite Royal Inscriptions in the Linear Script B: *Václav Blažek*

147 On the Genetic Affiliation of the Elamite Language: *George Starostin*

171 Some New Dravidian – Afroasiatic Parallels": *Václav Blažek*

199 Two Words: Two Worlds: *Panchanan Mohanty*

In Search of Mother Tongue

209 Tracing the Ancestral Kinship System: The Global Etymon KAKA: Part I: A linguistic study *Pierre J. Bancel & Alain Matthey de l'Etang*

245 Tracing the Ancestral Kinship System: The Global Etymon KAKA: Part II: An anthropological study *Alain Matthey de l'Etang & Pierre J. Bancel*

259 Was the First Language Purposefully Invented? *John M. Saul*

Islands unto themselves: the Andamans

265 The Numeral System of Jarawa Andamanese: *Michael Witzel*

© 2002 by the Association for the Study of Language in Prehistory

ISSN: 1087-0326 *Mother Tongue* (Journal)

Mother Tongue Issue VI, 2000-2001

Journal of the Association for the Study of Language in Prehistory

OFFICERS OF ASLIP

As of Annual Meeting, April 20, 2002. Address appropriate correspondence to each.

President: Michael Witzel witzel@fas.harvard.edu
Dept. of Sanskrit and Indian Studies
Harvard University
2 Divinity Avenue
Cambridge, MA 02138
U.S.A.

Vice-President: John D. Bengtson jdbengt@softhome.net
156 15th Avenue NE
Minneapolis, MN 55413
U.S.A.

Secretary-Treasurer: Peter Norquest norquesp@U.Arizona.EDU
1632 Santa Rita Avenue
Tucson, AZ 85719
U.S.A.

Mother Tongue **Editor:**
John D. Bengtson jdbengt@softhome.net

BOARD OF DIRECTORS

Anne Windsor Beaman (Brookline, MA)
Ronald Christensen (Lincoln, MA)
Murray Denofsky (Somerville, MA)
Frederick Gamst (University of Massachusetts)
Phillip Lieberman (Brown University)
Michael Puett (Harvard University)
Allan R. Bomhard (Charleston, SC)
Gyula Décsy (University of Indiana)
Harold C. Fleming (Boston University)
John Robert Gardner (Marblehead, MA)
Daniel F. McCall (Boston University)
Jan Vansina (Madison, WI)

COUNCIL OF FELLOWS

Raimo Anttila (University of California, L.A.)
Luigi Luca Cavalli-Sforza (Stanford University)
Ben Ohiomamhe Elugbe (University of Ibadan)
Vyacheslav V. Ivanov (Russian Acad. Of Sciences)
Winfred P. Lehmann (University of Texas)
Colin Renfrew (Cambridge University)
Vitaly Shevoroshkin (University of Michigan)
Ofer Bar-Yosef (Peabody Museum, Harvard)
Aharon Dolgopolsky (University of Haifa)
Dell Hymes (University of Virginia)
Sydney M. Lamb (Rice University)
Daniel F. McCall (Boston University)
Merritt Ruhlen (Stanford University)
Sergei A. Starostin (Russian State University)

ASSOCIATION FOR THE STUDY OF LANGUAGE IN PREHISTORY
Our Website: http://www.people.fas.harvard.edu/~witzel/aslip.html

Introduction to *Mother Tongue* VII

The passing of Professor Joseph H. Greenberg was observed in the previous issue of *Mother Tongue* (MT VI) with a eulogy written by Harold C. Fleming. At the time of Greenberg's death MT VI was in final stages of production, and the volume had been designated as a *Festschrift* for the late Roger W. Wescott. Now the present issue, MT VII, is dedicated to the memory of Joseph H. Greenberg. All of the articles are either directly stimulated by Greenberg's work, or further elucidate the paths he blazed in language classification, typology, and universals.

In the first section, "Studies in Language Classification," scholars continue to refine, redefine, and elaborate the hypotheses of classification proposed by Greenberg. Harold Fleming writes about two obscure languages of Ethiopia, Shabo and Ongota, and discusses how (and whether) they fit into Greenberg's revolutionary classification of African languages (made long before the discovery of Shabo and Ongota). Timothy Usher discusses the extinct Tasmanian languages, arriving at a partial revision of Greenberg's Indo-Pacific hypothesis. Allan Bomhard offers a response to Greenberg's Eurasiatic hypothesis, adding grammatical cognates from other languages that Greenberg also considered more-or-less remote relatives of Eurasiatic. Ronald Thornton responds to the Eurasiatic hypothesis as well, adducing grammatical cognates in Basque that he attributes to a deep kinship between Eurasiatic and Dene-Caucasian.

The second section, "Focus on Southwestern Asia," deals with languages from Iran to Orissa. Václav Blažek and George Starostin discuss the genetic affiliation of the extinct Elamite language of Iran. In another article Blažek continues with lexical parallels between Afroasiatic and Dravidian (a family often connected with Elamite). Panchanan Mohanty offers a fascinating glimpse of the Orissa region of India, where diverse language families (Indo-Aryan, Dravidian, Munda, Tibeto-Burman) have interacted for millennia.

Ironically, in view of the 1866 prohibition by the Société de Linguistique de Paris of discussion of the origin of language, in this issue it is precisely the Parisians who venture into the deepest chronological levels of human language. Pierre Bancel and Alain Matthey de l'Etang analyze the global etymon KAKA '*mother's brother/elder brother/grandparent', and attempt to unravel the original Proto-Human kinship system. John Saul offers a scenario that would explain the very origin of human language, as a deliberate invention.

Legend has it that Edward Sapir, in a lecture at Harvard, said that there are two classes of languages: Andamanese, and all the rest. We are not sure whether he meant this in a genetic, typological, or perhaps some other sense. Greenberg included the Andamanese languages in his Indo-Pacific phylum (see above). Here Harvard professor (and ASLIP President) Michael Witzel treats us to an essay on the unusual numeral system of one Andamanese language, Jarawa.

This issue of *Mother Tongue* has turned out to be the largest ever, in terms of pages. We trust its contents further the methods and objectives Joseph H. Greenberg held dear.

Taxonomic Proposals by Joseph H. Greenberg

Languages of Africa (Greenberg 1963):[1]

Families:	Sample languages:
AFRO-ASIATIC:	
I †Ancient Egyptian	†Ancient Egyptian, †Coptic
II SEMITIC	Arabic, Amharic, Hebrew
III BERBER	Tamahaq, Kabyle, †Guanche
IV CHADIC	Hausa, Margi, Musgu
V CUSHITIC:	
A NORTHERN	Beja (= Bedauye)
B CENTRAL	Awngi, Kemant (= Falasha), Bilin
C EASTERN	Afar, Somali, Oromo
D WESTERN	Hamar, Kafa, Ometo (= OMOTIC)
E SOUTHERN	Dahalo, Ma'a, Iraqw
NILO-SAHARAN:	
I Songhai	Gao, Djerma
II SAHARAN	Kanuri, Tubu, Zagawa
III MABAN	Mimi, Mabang, Runga
IV Fur	Fur, Biltine
V CHARI-NILE:	
A EASTERN SUDANIC	Dongolawi, Maasai, Nandi
B CENTRAL SUDANIC	Bongo, Logbara, Mangbetu
C Berta	Berta
D Kunama	Kunama
VI KOMAN	Bega, Kwama, Twampa
NIGER-KORDOFANIAN:	
I KORDOFANIAN	Katla, Logol, Tegali
II NIGER-CONGO:	
A WEST ATLANTIC	Fula (= Peul), Wolof, Temne
B MANDE	Vai, Mandinka, Mano
C GUR (= VOLTAIC)	Bariba, Gurma, Lobi
D KWA	Ewe, Yoruba, Igbo
E BENUE-CONGO	Tiv, Bantu (Duala, Swahili, Xhosa, etc.)
F ADAMAWA-UBANGIAN	Longuda, Gbaya, Zande
KHOISAN:	
I Hadza	Hadza
II Sandawe	Sandawe
III SOUTHERN AFRICA:	
A NORTHERN	Qxû (= !Kung), Maligo
B CENTRAL	Nama (= "Hottentot"), G//abake
C SOUTHERN	≠Hû, N/huki

[1] Greenberg (1963), *The Languages of Africa.* Bloomington, Ind. See also Merritt Ruhlen (1987), *A Guide to the World's Languages,* vol. I. Stanford University Press, for more details and history of classification.

INDO-PACIFIC:[2]

I ANDAMAN ISLANDS	Jarawa, †Aka-Cari, †Aka-Bea
II †TASMANIAN	(3-5 languages or dialects)
III NUCLEAR NEW GUINEA:	
A CENTRAL NEW GUINEA	(hundreds
B NORTH NEW GUINEA	of
C SOUTH NEW GUINEA	New
D SOUTHWEST NEW GUINEA	Guinean
IV WEST PAPUAN:	languages,
A WEST NEW GUINEA	not
B NORTH HALMAHERA	widely
C TIMOR-ALOR	known
V EAST NEW GUINEA	outside
VI NORTHEAST NEW GUINEA	ethnographic
VII PACIFIC:	literature)
A BOUGAINVILLE	
B NEW BRITAIN	
C CENTRAL MELANESIAN	

AMERIND:[3]

I NORTHERN AMERIND:	
A ALMOSAN-KERESIOUAN	Ojibway, Dakota, Mohawk
B PENUTIAN	Maidu, Zuni, Mayan (Quiche, etc.)
C HOKAN	Pomo, Yuma, Tonkawa
II CENTRAL AMERIND:	
A TANOAN	Kiowa, Tewa, Taos
B UTO-AZTECAN	Shoshone, Hopi, Nahuatl (= Aztec)
C OTO-MANGUEAN	Otomi, Mixtec, Zapotec
III CHIBCHAN-PAEZAN	Tarascan, Cuna, †Timucua
IV ANDEAN	Quechua, Aymara, Qawasqar
V EQUATORIAL-TUCANOAN:	
A MACRO-TUCANOAN	Puinave, Nambikuara, Tucano
B EQUATORIAL	Guarani, Arawak, †Taino
VI GE-PANO-CARIB:	
A MACRO-PANOAN	Bora, Ocaina, Galibi (= Carib)
B MACRO-GE	Bororo, Chavante, Cayapo

EURASIATIC:[4]

I †ETRUSCAN	†Etruscan
II INDO-EUROPEAN	English, Russian, Farsi, †Hittite
III URALIC-YUKAGHIR	Finnish, Selkup, Tundra Yukaghir
IV ALTAIC	Turkish, Mongol, †Manchu
V KOREAN-JAPANESE-AINU	Korean, Japanese, †Ainu
VI GILYAK	Gilyak (= Nivkh)
VII CHUKOTIAN	Chukchi, Alyutor, Kamchadal
VIII ESKIMO-ALEUT	Atka Aleut, Yupik, Inuit

---

[2] Greenberg (1971), "The Indo-Pacific Hypothesis, " in *Current Trends in Linguistics* 8. For Andamanese, see Witzel's article, this issue. For Tasmanian, see Usher's article, this issue.

[3] Greenberg (1987), *Language in the Americas.* Stanford University Press.

[4] Greenberg (2001), *Indo-European and Its Closest Relatives: The Eurasiatic Language Family.* vol. 1. Grammar. Stanford University Press. See Fleming's article in MT VI for detailed classification (pp. 19-21); and review by Bengtson (MT VI: 131-135).

Shabo: a New African Phylum or a Special Relic of Old Nilo-Saharan??

Harold C. Fleming[1]
Gloucester, Massachusetts

At a conference in Bayreuth, Germany in 1989 I gave a paper trying to classify Shabo, a newly found language spoken in the forests of extreme southwestern Ethiopia. It was never clear whether that paper was published or not in the proceedings of that conference. Presuming not and (more importantly) wishing to publish the greatly increased corpus of data gathered by four field workers, I offer this summation of all available data on Shabo and a brief attempt at the end to show some of the evidence leaning towards a Nilo-Saharan solution to the taxonomic problem. With luck many good scholars will grapple with the Shabo problem and one day we shall have a consensus on what Shabo means in African prehistory.

We first present the crucial parts of the Bayreuth paper, so as to set the stage.

"SHABO: PRESENTATION OF DATA AND PRELIMINARY CLASSIFICATION

One of the rewards of linguistic field-work, and indeed of comparative study, is that occasionally we find something different and important. Historically speaking, when one finds a major branch of a linguistic phylum or even a new phylum, there is cause for celebration and praise for the field worker. So it is to be with the language called Shabo by its own speakers and Mekeyir by its neighbors, the Majang of southwestern Ethiopia. Until very recently, both names were found sometimes on maps of Ethiopia. Nothing much could be made of them because there were no data to stand with the names and Shabo at least looked like a possible mishearing of Shako, an Omotic language spoken not far away.

This mystery disappeared recently (1984 and subsequently) when three diligent field workers and a wise comparativist produced data on Mekeyir, re-named it Shabo, produced more data, and perceived the most important aspect of Shabo – it is a major linguistic entity. Initially, Harvey Hoekstra of the American Mission in Illubabor recorded 247 words and told M. Lionel Bender of Southern Illinois University of their possible significance. Bender realized that Mekeyir was "something else" and sent the data to various colleagues for appraisal. Later, on Bender's suggestion, Peter Unseth of S.I.L. and Addis Ababa University and Anbessa Teferra of Addis Ababa University undertook more field-work. They have increased the corpus considerably, while Anbessa Teferra has settled in for a long-term study of Shabo, thus becoming the world's first expert on it. We ought truly to praise these scholars because Shabo is a major discovery. Its presence in our books and our thinking will significantly alter one major African linguistic phylum as well as the prehistory of the African Horn.

The present paper is an attempt to classify Shabo from a genetic linguistic or historical standpoint. Four alternative hypotheses have been suggested from the beginning of our knowledge, from the time when it was still called Mekeyir. *One,* Shabo is another member of the Surma (or Surmic to Unseth) group of languages, themselves members of East Sudanic within the Nilo-Saharan phylum of languages as proposed by Greenberg (1963). It shows numerous resemblances to Majang (Masongo) of the same group. *Two,* Shabo is a member of Nilo-Saharan, to be sure, but one so different as to constitute a major branch of that phylum. *Three,* Shabo is a member of the nearby Omotic branch of Afroasiatic (Afrasian, Semito-Hamitic) because there are many resemblances to Omotic languages and to socially dominant

[1] Past ASLIP President, Professor of Anthropology, Boston University.

Amharic (Semitic) and Oromo (Cushitic). *Four*, Shabo is a phylum unto itself, i.e., it is not a branch of any known phylum, nor can it be shown to be related to any known phylum. Many linguists prefer to call this sort of phylum an Isolated Language.

Considerable ethnological and prehistorical interest also adheres to the Shabo because they are nomadic forest hunters, living amongst a people (the Majang-ir) who are also hunters, but settled ones who do some farming too. One might suppose that the Shabo people and/or their culture could have something to do with Africa's other famous forest hunters – the Pigmies of the Congo. But we know very little about Shabo culture or ecological adaptations, except whatever is contained in the words 'nomadic forest hunters'. Physically, the field workers report that the Shabo may be shorter than the Majang and have rounder faces but otherwise their general appearance matches that of most other peoples of the west Ethiopian borderlands, called Shanqilla in Amharic or African Negro in anthropology. It is not just the case that the Shabo cannot be called Pigmies; more importantly they resemble their neighbors and linguistically kindred peoples (Nilo-Saharan), as well as more than a few Omotic speakers.

There are also problems with the linguistic database. Severe difficulties in eliciting data have been reported by the field workers and an unusual amount of variation in recorded data for any particular lexeme has been mentioned, not to mention verb paradigms or morphology in general. Much of that will be reduced by Anbessa Teferra's patient inquiry into these matters. For the present, however, we are stuck with the variation. The reader will appreciate all this when s/he reads the data presented. Basically, the problems arise from (a) the lack of schooling among the Shabo and (b) the lack of any language of interrogation except Majang."
[end of 1989 quote]

Presentation of Data

In 1989 the data were displayed without regard to the particular person who contributed them, aiming to spare the reader "needless complexity". They were arranged in three columns; one showing the English meaning. the second giving the Shabo forms in all their variation, if such were present, and the third trying to relate the Shabo forms to some form in an outside language. The third column did not incorporate all the suggestions made by my colleagues; to do so would have sharply increased the complexity of presentation and the space demanded by the paper. Instead of that, I chose to give credit in general to Lionel Bender, Peter Unseth, Anbessa Teferra, and Christopher Ehret for their proposed cognations, whether published or personally transmitted. It was thought sufficient to say that their suggestions were instrumental in moving my hypothesis from #4 above to #2 – to the Nilo-Saharan hypothesis. In the case of those forms marked p-NS* the form involved is from Christopher Ehret and his unpublished reconstructions of proto-Nilo-Saharan, as of 1989. Forms labeled p-Koman are either from Ehret or Bender via Peter Unseth. The reader will note that p-Koman to me is the same as Bender's p-Komuz. In the section following the presentation of data I am entirely on my own, using some cognations proposed by colleagues and rejecting some others. Ultimately, a hypothesis of taxonomy is subjective, representing the best that any one person can make of a complex set of data. I wish to be clear about that.

The current presentation of data is new and different. The data are arranged in five columns. As before the first is the English gloss. The next three columns are devoted to the data presented by three different field workers. The second column, or the first of those three, is given over to and dominated by the large corpus gathered by Anbessa Teferra and stored on an exotic floppy disk whose data have been `translated' by myself. It is basically a glossary of around 715 words. (More on Anbessa's data below.) The third column consists of data gathered by Ayyalew Mitiku of Addis Ababa University in the early 1990s, entirely independent of either Anbessa or Hoekstra but apparently using the same difficult informant who they used. Ayyalew's list consists of 244 items but many of them are grammatical phrases of importance. Ayyalew worked with Aklilu Yilma and I on Ongota and understands field problems unusually well. The fourth column is a summation of about 295 items gathered by Harvey Hoekstra; incorporating about 35 recorded by Peter Unseth would make his list 330. Hoekstra's is the basic corpus

upon which my original article of 1989 was based. One can easily see that Anbessa's and Ayyalew's new data have roughly *tripled* the information we have to work with nowadays, compared to 1989.

There are highly unusual peculiarities attached to Anbessa Teferra's new corpus. When he gave the floppy disk to me in 1989, it was with great pain and regret that he did so. He was giving up on Shabo because he found the field conditions intolerable and the principal (indeed only) informant simply impossible to work with. Moreover he was scheduled to move to Israel whence his true love had gone. Knowing that I was interested in Shabo and having worked on Mao of Diddesa with me that year, he decided that his work might be of interest to me. Just before going to Israel, he gave me a floppy disk with Shabo data on it. His instructions were clear: I give you this disk and the data on it are yours to do with as you choose. I wash my hands of the bloody Shabo business! Unfortunately, I did not get around to looking at his Shabo data until after he had left. Then my computer itself died. Thus it was not until much later that I tried to read the data on his floppy disk. I found that I could not read it at all. Moreover, the disk was a Hong Kong export, popular among non-wealthy African students, and so was his computer. No one who I asked could read it. So I put it aside as a `lost cause' for several years, until more recently I tried to read it again. There was no success – again. Then just in frustration and without hope I asked the computer to print the Shabo `tape'. I must have fooled it somehow because lo and behold it printed the whole corpus!

It took quite a long time to decipher the phonetics because the Hong Kong computer has no ASCI or other ways of writing `exotic' phonetics. Thus such a word as `anklet' was recorded as [lij&^an@%] or `comb!' was {p'ic&^'c&^'a] and there were many such transcriptions. Like most scientists I rather like puzzle-solving and so I took on Anbessa's Shabo data. Eventually I solved 99% of his representations because of the logic of the Shabo language and the areal tendenci es of southwestern Ethiopia and comparisons with Hoekstra's data. And it was fun! `Anklet' turned out to be [lijaň] and `comb!' became [p'ic'c'a]. So after all Anbessa's pain and hard work and distress there was a payoff. His valuable data finally got published for scholars to use. Finally the legitimate question can be asked of this retrieved and translated data: are they any good? My answer would be yes, for the most part, because the Hong Kong representations are regular and `lawful' (predictable) and because I have worked with Anbessa in the field and know him to have a good ear and to be a competent field worker. The difficulties with the Shabo informant were experienced by later field workers.

Finally, the fifth column of data is occupied by the Uduk language of the Koman group of Nilo-Saharan. The Uduk live in the eastern Sudan near the Yabus river next to the Ethiopian border. A considerable dictionary of Uduk was published by English scholars (Beam and Cridle, 1970) but has apparently escaped notice by those working on Koman in recent decades. The main reason for putting these data in this context is to get it all into circulation and for the striking similarities to Shabo to be noticed, occasional though they may be. In Greenberg's original work on Koman he put Uduk as coordinate to the rest of Koman. Later field work by Bender and others recorded 'T'wampa' as the self-name of Uduk. The T'wampa data are very much like the Uduk data of Beam and Cridle, although not nearly so extensive. However, the Uduk recorded by Evans-Pritchard in 1932 (Sudan Notes and Records 15, 1-61) differs systematically from the Uduk of Beam and Cridle and in the direction of Gule where earlier Koman [*š] as in [šum] `meat' has been replaced by [f], at least in some words. At a minimum the 79 words recorded by Evans-Pritchard represent a different dialect.

The data are phonetic, phonemicization having been Anbessa Teferra's problem. The symbols used are mostly those of standard Africanist tradition, except for a few consonants and most of the vowels. The limitations of my computer are a major factor. No tonal data at all are presented. Among the noteworthy consonant symbols are [ŋ] which represents the velar nasal stop "ng", [š] for the voiceless palatal fricative "sh", and [c] which represents the usual pre-palatal voiceless affricate [č], as in English "ch", rather than the "ts" so commonly perceived of [c] in Europe. The imploded or ingressive stops, usually either bilabial or retroflex, are represented by [b'] and [d']; they are very common in both Shabo and Uduk and indeed in southwestern Ethiopia generally. The velar ingressive [ɠ], while fairly common amoung Omotic languages, is not reported for Shabo or Uduk. Since aspiration is reported for both Shabo and Uduk, the

consonants so affected are represented by [ph], [th], [ch], and [kh] respectively. One of these, [kh] has clearly been merged with the velar fricative [x] in the recordings of Uduk. The vowels are shown "as in Italian", except that length is rarely shown. To render the short midfront unrounded vowel as in Italian "petto" or English "bed" the symbol [ê] is used. For the low-mid back rounded vowel as in Italian "giotto" or British English "job" the symbol [ô] is used. In the majority of cases this should probably be represented by [o], since the source (Bender) seems normally to perceive [o] as [ô]. The longer and shorter varieties of 'schwa', as in English 'bud' and 'sofa' are rendered as [â]. Finally, either the high central vowel of Amharic /t'îd/ = 'juniper' or the shorter back version of [i] as in English /tît/ = 'teat' are rendered by [î]. The glottalization of any consonant "C" is shown by raised diacritic ['] so that [t'] for example is a glottalized [t], as in Amharic /t'ut/ "breast". However, the simple glottal stop itself is shown by [ʔ].

Some of the data have letters in parentheses after them, e.g., `tongue' handa (CU), which means that Cushitic relates to this in some way. Most entries are followed by one of these three letters, (MJ), (AM) or (OR) which mean Majang, Amharic or Oromo, the sources of most loan words in Shabo or resemblances which might be loans or cognates. Other labels are, as follows:

AA = Afrasian, **OM** = Omotic, **SOM** = South Omotic or Somotic, **NOM** = North Omotic, **CU** = Cushitic, **DI** = Dizoid branch of NOM, **GO** = Gongan branch of NOM, **Ong** = Ongota, **NS** or **N-S** = Nilo-Saharan, **CS** or **C-S** = Central Sudanic (of Greenberg), **ES** or **E-S** = East Sudanic, **SU** = Surma or Surmic, **UDUK** = Uduk, **Masai** = Maasai, **KO** = Koman, **Tabi** = Tabi

GLOSS in ENGLISH	{ SHABO (MEKEYIR) ANBESSA	AYYALEW	HOEKSTRA }	KOMAN UDUK
Aardvark		b'ooši (MJ)		
Able, be / unable, be	fakkee / fakku-be			
Absent, be	addake			
Ache / weak ache	k'ondu/k'ondu omoke			
Addiction	nima ď eet			
Advise, to	mabuma			
Afraid, be; suspect, to	laaša			
After			yêbagidiŋ ada	
Afterbirth, placenta	ňeeda			
Afternoon	dindimba		dindiŋ	
Again	toppiti			
Alive			bôdala (MJ)	
All	yero	wec / wêêc'	wêêytce	b'aar
"			ufebec	b'eles
"			yiŋkapo	b'ilb'il
"			hab'a	
Animal			geta	to?e
Annoyed, be	t'op'un			
Ant			môrôdiêŋ (MJ)	
Anger	ogoopu			
Ankle	dikilam			k'ochkom
Antelope, `deer'			goŋgoš	koph

Approach, to	ootu (AA)[2]			
Arm, shoulder			kêp (NS)	
Armpit	c'eggise			bwambi
Arrive, to (?)	abbi amme			
Arrow	kaaŋit			
Ashes			cimbo	p'iny
"			fuŋka/puŋk'wa	a-c'ilaθ'
embers				a-kaphany
Aunt, MoSi, FaSi	luwwa			
Avoid, to	at'om			
Axe		awe	awe	
Baboon, species		kooppa	kopa	addawa
Baby (to 3 yrs)	sasale			aŋa
Back (adj)	gisatt			
Back (noun)	sakki	šaak / sak	kutugun (MJ)	apho
Backbone, spine	sakki imaha			
Backyard	apuur			
Bad			kosa/koš (NS)	
Bag, sack	keese (AM?)			
Bark (tree)			ork'an (NOM)	a-didiya
" "			šukuma	a-khwaye?
Barren, grassless place	c'aamu			
Basket	kante			
Bathe, wash, to	hoora			
Beard	b'ec'c'a (NS,OM)		šamum (ES)	hala?
Bed	beero		bêêro	
Bee		soy	šoi	a-ðam
Beehive		daana (DI, CU)		akhura ðam
Beer			taajam (MJ)	
Before (adv.?)			icôkoe	
Begin!	accaki			
Belly, stomach	šuk'uma		sukuma/jukuma	bwa
Belly, liver			cukuma (KO)	
Belly, pot-; big abdomen				buš (Ong)
Belly ache	ď'ooso			
Belt, a	tib'e			
Best-man/WiFa	e`nget / e`nge`t[3]			
Big	mat (Tabi)	matti	hêddi/kiddi (AA)	cacaa
Fat			mat	
Bird			hulut	ď'ii
Bird (a spec.?)		elette		ðuule
Bird, sp.., pigeon			kulbirk	gurko?
Bite!	p'illa	b'illa/p'illa	p'iida/b'illa	

[2] See Ongota /ootu, otta/ `to go' and its many Afrasian cognates.
[3] At a wedding for `best-man'. Second form = father-in-law (WiFa, HuFa), Si-in-law, Br-in-law.

Bite, to			k'aw-ge	woc'
Black, blue	c'iiŋ	c'in	c'iin/c'iiŋ	ď'okholaď'okhol
Black				ðisðis
Blacksmith			bêbêêrk	
Blind	muutu			
Blood	dammo	domo (NOM)	dêmmo (NOM)	a-bas
"			caan	
"			yêrom (DI)	
Blow, inflate, to	fiffi			
Dust off!	fiff			
Blow a nose, to	ňuk-eet (SOM)			sin šuš
Blue (cf green)		šoolo		
Blush, admire, be happy	giiď'i			
Boat			goona (OM)	akhur
Body			êêk (MJ)	is
Body, whole, person		koor		buŋgwar
Boil, to			hop / kop	
Boil, a	metwak			
Bone	imaha		êmêha (MJ)	a-sima?
Bottle	t'armuusi (AM)			
Bow! (bend down)	oŋoon			luŋ
Bowl	saani (AM)			
Boy (cf child)			c'o	
Boys, children	k'ufa	k'ufaa		
Bracelet, anklet, bead	lijaň			
Braid hair, to	heď'a			
Brain	ď'unk'u			θula
Bread	matnoy			
Break, to	set't'a			
Breakfast	k'ursi (AM)			
Breast (♀ presumed)	du	duh	duh	
Breast " "			kowan	ako
Breast, chest			kokoŋ (MJ?)	a-bor
Breathe, to	hooppu			ši?in
Bridge	dankare		nora	
Bridge of nose	koomoš			
Bright	k'anja			
Bring! Bring here!	tamm / tam		tam (NS)	
Bring another!			yuka tam	
Brother		maa		
Brown	bangaš-eet c'iiŋ[4]	araawe		
Buffalo, Cape		gašša /gaša		
" " (♂ only)		booj/boŋ/booy (MJ)		
" " (♀ only)		geyuum (MJ)		

[4] Literally it is 'half black', although 'half' is a verb in form.

Bull			jigu (MJ, OM)	rasim biph
Bullet	t'iito (GO<AM)	t'iyito (GO < AM)		
Burn, to			goo-ma / goo-ta	
Burst, to	eb'er			
Bury, to	hullu			
Bush; uncultivated land	sa			
Bush pig, forest hog		geeda	geda / geto	khuθur
Buttock	sunše (+anus)	šunše		p'en
Buy! Sell!	ab'al			
Calf (of leg)	seelak			a-saď
Call,to	wonga			
Calm	zimteňňa			
Carry, to	k'oc'c'u			c'eth
Cat			adure (OR)	a-nyaw
Catch, to	ga}am [5]			
Chair			daŋge	
Stool	barsum (CU)			
Chance, by	yabba			
Change (noun)	getumphu			
Chase, to	ub'i			
" back and forth	jo ame			
Cheek	b'akiwon			p'en-t'iš
Chew, to	atumak			k'a
Chief (political)			juum (AM)	
" "			juku (cf God)	
Child			masoi (MJ)	
Child, boy	c'o	c'oh		
Child, female	umb'a c'o			
Child, male	ull c'o			
Child (cf male)		uul		
Child, toddler	gogoy (MJ?)		maso (MJ)	
Child (4 to 7 yrs)	toon			
Chin		nigem (MJ)	k'aleega	kap'aš/kab'aš
Circle	atull			ham (vb)
Civet cat		bogaroy (MJ)		p'enaman
Claw			kiik (NS)	
Claw, fingernail	seyŋse		šeeci	a-gwaphi
"			sengi	nyeŋ/nyem (vb)
Clay	cup'oy			
Clever, cunning	kecca			
Cliff	komše			
Climb, to	geera			
Clitoris	bacci k'oy			
Close (vb)	gifo			

[5] The phonetic value of the } in this word and a few others cannot be determined; it may be [?].

Close (your) eyes!	muutu			
Blink, to	mit't'ak'			k'amuθ'
Clot, to	goŋen			
Cloth, clothes	seemmo	šeemo (GO)	šemo (GO)	
Cloud	guuppo (NOM)		guup'o (NOM)	
Cloud			wuri	arakh
Cloud			gumo (AM)	
Coat	kooti (AM<ENG)			
Coffee			šemo (hmm!)	
Cold	k'eenď'e	k'enď'i	k'endi/k'enď'i	c'eď'
"				θ'uphaθ'uph
Cold, a (disease)	baac'e	baac'e		
Color	k'alami (AM)			
Comb, a	paakset			
Comb, to	p'ic'c'a (GO)			
Come! / pl.		amm / am-ce	am / ʔam	/iyuuʔ
Command, to	aď'a			
Confused, be	inon habba			
Continued, he	tukeete			
Cook!	satta			
Cook under embers, to	nasi			
Corpse (breathe not)	hoopu ď'eb-be			
Cotton	yirbi (OR)			
Cough, to	k'oŋhu			
Cousin, FaBrSo, MoBrSo	kaamay			
Cover!	aguc'			
Cow, cattle (head of)		minja (NOM)	minja	biph
" Heifer, calf		minja c'o		ari biph
Cow house (cattle stall)	minj-e aha (NOM)			
Coward, blunt (?)	t'op'a			
Crack, to	badawe			
Crocodile			ugulke (MJ)	a-naŋaʔ
Crooked limbs	gongooď'e			
Cross-eyed	se wollo			
Crossed (eyes)	wollo			
Cross hands, to	mayowe			
Cry of rejoicing	c'iiŋa			
Cut, to; cross, to	c'ota		cot	c'ith
" "			êk'êêm	
Dark	dindim [6]			ðurum-iď' (vb)

[6] This is a world cognate. For example see Omotic /ď'um/ and Burushaski /ṭumṭaŋ/. [And Proto-Sino-Tibetan **dhV̄mH* 'dark, shade'; Yeniseian **tum-* 'dark'; Sanskrit *támas-*, Latin *tenebrae* (< **tems-r-*), German *finster* 'dark' (< **θim-st-ra-* !); Amerind: Ayoman *tem* 'black', Miskito *timia* 'night', Araucanian *θumiñ, tumiñ* 'to darken', etc. Ed.]

Day			hayum	a-cim
Day after tomorrow	jaalḍ'ooku			
Deaf	k'iti ḍ'eb-be			ḍ'ik / ḍ'iye
Decide, to	inon ḍ'eb			
Deep	jooli (Tabi)			
Desert	c'eenna			
Despise, to	k'alli			
Dew, wet	waaḍ'i		waaḍ'i	jaaphe
Diarrhea	k'at'ama			
Die, to	k'o		k' o / ko	wu
Dead			ko	
Dig, to	k'ec'c'a			
Dip!	bina }am			
Disappear, to	doogu			
Disease	beesta (AM)			
Distilled liquor	arak'e (AM)			
Distinguish, to	erk-eeti			
Disturb, to	k'albi košša			
Ditch	fook'u			
Dive!	cicoku			
Do something slowly	agaaḻe			
Dog		kaani (NOM)	kaan/k'aan	
Dog			kaʔal	ulla
Donkey			kuro/huro (GO)	θuluny
Door (way)			t'owat	šant'amo
Down hill *cf* step	goomu			
Dowry, bride-price?	ohe			
Dream, a	manḍ'a			šub' (vb)
Dress, a	k'amiši (AM)			
Drink, to (water)	wo	woo/woh	wuo / wo	phi
Drink, without stopping	kewu			
Drive (animals), to	min-eete			
Drizzle	c'ak'an			
Drum	targuy (MJ?)			
Dry			cubu / c'ofo	
Dry	c'ooto		s'oto	khuθ'
Dry			ici	
Partially dry	moocco			
Dust	duudur		takafut	
Eager, be	nima			
Ear	k'itti	k'itte	k'iti / k'ithi	c'e
Ear wax (earshit)	k'iti-ke k'a			
Earrings	k'iti amb			
Earth	bok'k'u, bok'i	book'	boka	a-ceš
Floor			boko	
Earth quake	bok'i giwase			

Earth, split	bok'k'u bada-we			
East, sun road	oha homa			
Eat-s / ate /to eat	t'a (imp.)	t'ah / t'ag	t'a (KO)	šwa
Food remains	t'a			
Grain remains	t'a			
Egg			totokan (MJ)	aʔom
Elbow	koggod			p'ena kwan θal
Eldest child, 1st born	tey			
Elephant		aŋee (MJ)	godo	je
" (♂ only)		goodo (MJ)		
" stomach		šukuma		
" cow		goode umb'a		
" ear		k'ette		
" toes		šeyinkšee		
" trunk		sona		
" tusk, ivory		kaaw		šeň-je
Elephant shrew, giant		inšeeyi		
Enemy	dowwol		doolk	
Enough, it is	(ďebe) gaye			
Epilepsy	seett			
Equal	oroom			
Eternal	iššak			
Evil eye (cf greedy)	k'ooro			
Eye	se	se / še	se/şe/še (KO)	ʔe
Eyelash, eyebrow	se c'eek'a			warmac'-i ʔe
Pupil of eye	c'iiŋ-in se			
Face (body)	jaar		k'awk	bwam-ʔe
Fall, to	fuu			
Far	teema			gwaďan
Farm, a, field, a		tawa	taawêt (MJ)	
Farmer			taawa a puut	
Fat (adj?)			ciime	
Fat (noun?)			s'ilaŋ / s'ilam	yin
Father	babbe	maati		co
Grandfather	appa			baba
Great "	orey			
Fear, to; startled	bance			laʔaď-ki
Feather, hair		c'eeka	ceek'a	ješe
Feces, shit	k'a			gureʔ
Feed, to	owo			
Feline, sp., serval, cat		adure (CU)		a-cheθ'
Feline, genet		goyin (MJ)		kuraʔ
Fell an opponent, to	mandi			
Fence	masare		walašeme	
Fill up, to	kawaŋ			ki ŋac'

Finger, thumb (only)			pôlpôl (AA)	
Finger, toe, digit			côpulkoi (MJ)	meď, ufûm
Little finger	hedebu efu			ari meď
Finger tip	efi k'oy			
Finished / to finish	koore / kooru			
Fire			cuuwa/šowa/c'owa	oď
First, front	jaari&-t			arasi
Fish			caŋa / c'aŋa	a-paama
"				a-dulaŋ
Fist	sonsom			k'uchi meď
Flat	hab'u			
Flat ground, pasture	bake			
Flea		naako	utaalêt/utnalêt	a-θ'ikab'
Flee, to	aguc'e			piš
Flesh (see meat)				
Flood	woi kol			
Flour	c=ti [7]			
Flute	koyte			
Fly, a			kayaŋ (NS)	a-ðeʔo
Fly, a			jefd / zefa (MJ?)	a-yimeʔ
Fly, a			têr	khanti
Fly, to	kol>i / koi`i			phe mis
Foam	kurru			
Fog	c'iiŋita			šile
Fold, to	šonšoom			
Food			ňilai / ňilal	
Foolish	gaaga (ENG?)			
Foot			ďuk (NOM)	šok' / šoʔ
Foot	bicca		bica	
Forbid, to	ahoma			
Forehead	diiri			buyeʔ
Foreigner	kent-eet (CN)		yiŋga	
Forest			caant / caart	bwaany-owa
Forget, to	taare			
Forgive, pardon, to	ot'om			
Foster parenting	košša			
Fox, jackal		waŋgoy (MJ)		a-makh
Fragrant	c'iime			
Frequently	weec'in imme			
Friend	saam		caam	
Frown, to	se c'iin			
Frog			mareen	a-c'er
Gall	miraano/meenaro			

[7] The phonetic values of [c=] are not known. [ufûm] from Evans-Pritchard is cognate to [efu].

Gate	sank'a (AM?)			
Gather, to	atull			tul is
Get up!	p'ala			
Girl, maiden	peet		koto / kato	
Give, to			hanno (NS, AA)	chi, paš
Glutton	šuk'uma mat			
Go, to	no		no (NS)	ya
Go, to		b'aala	b'al	
Go slowly & carefully	elebu			
Goat		kimta	walla (NS)	mi
God, god	juku (+ chief)	zuuku		
Gold	work'e (AM)			
Good		ď anka	ď aŋka	b'orab'or
Gossip, to	ď eewe			
Granary	gootare (AM)		wuya (NS)	
Granary			gootare (AM)	
Grass		elti (MJ)	elt (MJ)	
Grass			mante elt	
Grass			camo	
Grave, burial	ufa-ka kol-de		pi	
Greedy (cf evil eye)	k'ooro			
Green		c'aam		
Green, blue	soolo			
Grey (half white)	bangaš-eet ď aac'a			
Grey hair	bukko			
Groan, to	aguuman			
Grudge	dimme			
Gum (mouth)	ňaari			k'oď še
Gun, rifle	k'awwe (OR)	k'aw (OR)		
Hail (ice)	sappo		wêrê	a-wasa
Hair, head		k'oyi	ko-jeka	
Hair	c'eek'a		šek / c'eeka	amur
Half, middle	bangat@% (UDUK)[8]			b'an-chaan
Hammer	powac			
Hand	ifu (+ palm)	iifu	if / epu (NS)	
Hand, finger / thumb	efu / efi			meď
Hand (2ndary form)			oorêt	
Handful , palmful	ifu kawang			
Hang, to	šeppu			
Hard-hearted	košša			
Hat	sooro	šoro	šoro	
He (see Pronouns)				
Head, skull	k'oyi		k'oi/k'oy (KO)	k'uph
Head (of dead sheep, etc.)				k'u

[8] Phonetic value of /@&/ is unknown. See also 'open', 'count, to' (the latter under "Numerals").

Head louse, hair louse		k'oyi nena		
Hear, to			atcête/ êcêt	
" "			ʔot'om	
Heart	dogaše		luunce khwasinycamaʔ	
Heart			ďundêt (MJ)	
Heavy	guula			dithadit
Heel (of foot)	bogowan			p'ena thiŋkila
Help!	okkon			
Hen, chicken, fowl		bako (NOM)	bako / baaka	a-ŋwa
Hen, female chicken			bako umba	
Cock, rooster			korma (OR)	
Here / I am here	manka / tiŋ manka			aďan, mahan
Hero (cf husband)	ullu			
Hill	diliya			
Hip	b'eetok			empaď
Hippo		ijoom (MJ)		yewaʔ
Hit, to			boole	
Hoe			gace	
Hole	apura (NS)		utui	jis
Hollow (adj)	afura (NS)			
Honey		sina (NOM)	šina	
Hook	saata			
Hope, to	k'orro			
Horn			kwete (MJ)	apoomeʔ
Horn			kulba (MJ)	
Horse			gaŋge (OR)	šumarum
Hot	hob'u (NS)			b'aθ'
Hot, it is		suubu	cobu/šuubu	
Hot spring	iyee			
House	ďok'k'u	ďok'u	ďok	gub'
House (archaic)	aha (AA)		aha	
How much?	hamph			ek-ata
Hunch-backed	guumi			
Hungry, be	melese			
Hunt, to	luge			
Hunter			caagt (German!)	
Husband (cf male)	ullu			akathin
Hut	basso		kêdêp (cf small)	
Hyena		ďuŋeď (MJ)	warabiše (OR)	a-nyuruny
I (see Pronouns at end)				
I am (♀ = female speaking)		taŋka		
Ignorant	gaga			
Immediately	joomba			
Insult, to	seď'em (AM)			
Intestines, gut	lundu			a-c'olo
Small intestines	lundu hedebu			c'olo-ŋkuš

Large intestines	lundu mattee			
Intoxicated, be	oppe			
Investigate, to	maandi			
Iron	awwe			
Jaw	gaama	gaam (NS)		
Chin		nigêm (MJ)		
Jealous, be, hate	yaw			
Joker	anyaayi			
Judge, a	b'oogo ufa			
Jump, spring, to	cicoku			
Kick, to	atti			
Kidney	juhuma			
Kill!	haa	haa	ka/xa/ha	
Kill, courage(?)	ŋahuma		ŋahuma	
Kill animals, slaughter	guuru			
Kindle a fire, set fire				chiθ'
Kinsman, relative	tekkan			abas pem
Close kin	tekkan ootu			
Far kin	tekkan teema			adhana
Kiss, to	c'umba			
Knead!	sukum-eet			
Knee	huttu		kutti/hutu	k'uphaď uphun
Kneel, to; crawl, to	kurgup			
Knife	aare	šikki (NOM)	aarê	
Knock!	totok-eet			
Know, to / I know	ď e		ď e / tiŋ ď ea	
Lake			côôkê	
Lap (of thighs)	hukkum			
Laugh, to	salla			
Lazy	abale			
Leaf			caam/c'am	c'emen
"				jiphi
Learn!	appo			
Left (side)	hando (NOM)			cam
Left handed	hando ufa			chumpal
Leg, upper			biša (NS)	
Leg, lower			šela (SOM)	yoroʔ
Lend, to / borrow, to	maš-eet / maš-en			
Leopard		buu	bu / ba	a-kwa
Black leopard		bu c'iŋ		
White leopard		bu ď ac'a		
Leprosy	doop'oy			
Lick!	nap'p'a (GO)			t'ed'
Lie, to	minc'i			
Lie down!		hab'a		iši ki tar
Light (adj)	fonk'a			

Lightning	ancana		yatalal	b'elec'
Lion		deeppe (MJ)	ď'êpê	aðoph
Lioness		deepee umb'a		
Lip	k'eek'k'ee			
Lip, upper			ňaar	
Lip, lower			ňgim	
Listen, to	ec'ethi			
Liver	b'ab'u		cukuma	a-du
Lizard		šêlšêl		a-meʔeʔ
Loaded, he	taabu			
Lock	mapase			
Long	ď'aama (CU)		ď'ama/dama	tur
Look at, to	yeesi [9]			hil
Loosen!	šoowe			
Louse		nena	nêna	a-šokom
" (2ndary form)		nyet		
Lung	šombo / sombo		šambo (AA)	aphopošo
Mad, crazy	maraati			
Maize, corn			maakêle (AM?)	
Make bed, to	atutu			
Malaria	set'aani			
Mammal, small		morošoy (MJ)		
Man, male		kotto		
Man	ufa (KO)		ulu	
Man, person		ufee		
Man, adult (35-45 yrs)	booloŋ			
Man, old (45 yrs +)	gutann			
Many, much		haaba	kaaba/xaaba/haaba	ðanpa
Plenty	haabba			ekha
Mark, facial or tribal	gaaše/gaace			
Market			gaba (MJ <AM)	
Mate (animals), to	ga			haʔ / hak'
Mead, honey wine	hc=gula	ogula		
Honey wine	t'êjj (AM)			
Measles	meeň			
Measure, to	(tiŋke) orom			
Meat (tone diff from 'kill')	haa	haa	ha/haa (SOM)	šum
Medicine	atto (GO)			
Meet, to	yetaasa			
Merchant	nagaade (AM)		babalkê	
Midwife	riŋ-eet/riŋeet (?)			
Milk (cow's)	erse	eršee (MJ < OM)	irse (MJ<OM)	
Milk (human)	ill (ES)			
Miscarry, abort, to	papal-eet			

[9] This is also listed as [yeese], meaning 'open your eyes wide!'

Mongoose		kooki (MJ)		a-kuθ'
"		watiri (MJ)		
", banded		yetun		
Monkey			bêy	a-b'uθ'
Moon	kasipu/kašip	kasip	kašip/kacap	appee
Morning	c'iinka	zab	jabo	monθ'amo
Early morning	kobin			kaθ'oma
Mosquito			miltit	
Mote, sand in eye	mook'u			
Mother	indii (AA)	lêtta		a-taď'a
" in law, HuMo, WiMo	b'eenda			
Greatgrandmother	jiji			
Mountain	goom	goomu	goŋ / gom	
Mountain			gôôrt/gôônt	k'uwoš (`top')
Mouth			kaw/k'awut/kau-se	t'wa
Mouth, teeth	kaw	kaw		
Face (body)			k'awk	
Mud	t'ink'o (MAO)		ď'oke (OR)	
Mule			paddê (OR?)	
Murmur, to	appo			
Naked	seemmo ď'eb-be[10]			
Name		nekki	wuŋka/iŋkaye	gway
Narrow	c'unď'e			
Navel	bool			ŋalkum
Near	ootu			gwaththaan
Necessary	ď'eet			
Neck			nôôdô	k'os / j'us
Neck	nimma		numa-se	
Neck, nape of	kiď'im			
Necklace	hebba			
New			co / tso	piď'
"			kinanco	θis / θith
Night	deppo/deppu		dippo/ď'îpu	monθ'iny
Nipple, teat	du k'oy			
Nose	sonna	sona (AA +)	šôna/cona	šuš
Nose-bleed	sone dammo			
Not, verbal negative		-be		
Now	mooha		moha	
Ogre, monster	soonno			
Ointment	diikuy			
Old man, monk	gutare		gutêrê	ðan
Elder	gutanše			
Old woman	jarti (OR)			ab'oma tiŋvale
On, upon			pond	

[10] Literally = `clothes has-not'.

Open!	ateemp@%[11]			
Other			yuka/yuu	
Other			maʔam	jamuʔ
Otter shrew		kilta (MJ)		
" ", giant		tawoor (MJ)		
Paddle, to	kew-eet			
Pain			došo	
Palm (of hand)	efu be			
Pant, to	jojo gin hooppu			
Pants, trousers	muteyntey			
Paralyzed	duro			
Pass by, to	hoori			
Pass on, to	hamam			
Pasture	mante			
Patch-ed	haat'a-we			
Peel, to	b'unc'u (OM)			k'aph, phwa
Penis	ɗ'ingi	ɗ'iŋi		yis
Uncircumsized	ɗ'ingi c'ota be-ge			
Circumcized	ɗ'ingi c'ota-we			
Pepper, red			warkat'o	
Perfume	šitoy (MJ<AM)			
Perhaps	ɗ'oxa			
Person (sg)		iinki	upha	waθi
" (pl)		upa		
That person		ŋa upa		
Pierce, to	afura (NS)			p'waɗ'
Pillow		k'oyi amb		
Pimple	poorako			
Pinch!	b'oot'on			
Pipe, smoking		kêngêcê		
" "		šombar		
" " , of clay		hoob'a		
Pipe, tobacco bowl of		booli		
Place (noun)	mamank			
Plan, to	ikokom			
Plaster mud, to	usuk'k'ut			
Play!	c'iŋŋa			
Please, to	mo giiɗ'I			
Plural (grammeme)			yeero	
" "			-k / -ka	
Pocket	kiisi (AM)			
Pole cat, striped		kaawe (MJ)		
Pool	teete			bapakhaana
Poor	abale			

[11] See footnote 8.

Porcupine		dek'e		yaph
Porridge, food	ŋilan			
Pot	hiippi		jak / jah (SU)	
Coffee pot	jabano (GO<AM)			
Prefer, to	marat'ik			
Pregnant	horoom			bwa (cf belly)
Priest	keeši			
Pubic hair ♂	ď'ingi c'eek'a			
" " ♀	bacci c'eek'a			
Purple	daama			
Put!	e&``			
Question, to	iŋana			
Quickly, fast	jojo			
Rabbit, Spring hare		bilbilte (MJ)		a-wariny
" , hare		delikeš (MJ)		
Rain	ď'im	ď'iimmi	ď'im (KO)	heθ
"				ašok'
Rainbow	toosi	ambêšoy (MJ?)		
Rat			kilto (MJ)	a-θ'ikh
Recovered, I	jim ame			
Red	c'aara	c'aara (CU)	caara/c'aara	p'eri mo ki phiyu
Refuse, to	nimbe			
Reins	sansalate (AM)			
Relations tween wives	ňakkiye			
Remains (of food)	pilpari (AM)			
Remove (horizontally)	ga}am			
Remove (vertically)	ta}abu			
Remove clothes, take off	ga}am			
Resemble, to	batte			
Rest, to	sesek'o			
Return home, to	jo / jo&`			
Revenge	k'oro			
Rheumatism	musar`			
Rib, chest	huwwan			asima-ŋ-gwar
Rich	wori yinga			
Right (side)	sisawo			(bim) poros
Ring (noun)	amatti			
Ring (noun)	k'aahko			
River			mirinko (SOM)	wor
Road, path	homa/homma		komaj/khoma/homa	bway
Highway, big road			k'idi-ke	bway tur
Roast!	k'ass			
Roll, to	atti			ď'aŋkaliď
Roll up, to	acuncum			k'uch
Roof (head house)			koi duka	
Roof top	ď'ok'k'u k'ona			

Root			tilt'il (MJ)	biirman
Rough, sticky	t'ank'a			
Round				kun is
Rub, to	aŋňan			
Run! Escape!	kol			
Saddle	koora (AM?)			
Salt	mooyi		moi (MJ)	aď oŋkoro
Sand			kiira	asib'
Sand		iiwor' (?)	k'êwê (MJ)	
Satisfied, be, satiated	huma			
Say, to			kimmo	o gwo ki
Say, to			com/sum (NS)	o ki
" "			apho (AA)	
Scab	karsoy			
Scar	diidi			
Scorpion			ulêjê	ðamina ď akh
Scratch, to	k'ik'k'o			k'war, θ'uth
Scream! Shout!	kewu			
Scrotum elephantiasis	ď opte			
Secret	yimba			
See, to			yiino (NS, SOM)	
See, to			miimi	
Seed			aweek'a	emen
Seed			weykon/weykun	
Send, to	wošša			
Separate, to (?)	iinki			
Sew, to	luulu			
Shade			tip (Masai)	akhašira, ala
Shake, to	giimba			
Sharp	buuja			
Shave, to	musate			
She (see Pronouns)				
Sheep		baggo (GO)		
Lamb (cf small)			kêdêp	
Shepherd	k'oro			
Shield	gasin (MJ<AM)			
Shirt	šurabi (AM)			
Shiver, to	aď uď u			dee dena is
Shoe, shoes	c'aama (AM)			
Shop, store			suk (MJ < AR)	
Short	hikkira		kuthakuth	
Short of breath, be	ubbuŋ-eet			
Shoulder	go		kêp	k'uphbi
"				jahamb'a
Shy	saame			
Sibling: Br, Si	hiyya			

Sickness			hamatê	
Side	k'acco			gwar
Sin, a	b'ooša			
Sing, to	baayo (NS)			
Sip, to	laak'ak			harub'
Sister		k'oonda		b'wah
Sit, to			mo (CS)	k'o pen
Sit, to			maŋka	chab'aď
Sit down!	mopa/moopa	moopa		
Sit ĉ legs spread	taam			
Skin	wann		wa / wan (NS)	
Skin, six (error)			akuš	
Sky	hoop'a	poont	poŋkt	
Slave			laŋwit	
Sleep, to	hab'afa		hab'a	c'eď (sleepy)
Sleep, to			t'olu/t'olʔam	išʔe
Sleepless	hab'afa ď'eb-be			
Sleep a little, nap	set'ol hedeb			bora e
Slide, to	dert-eeti			
Slip through, to	apura			
Slippery	dert-eet			
Slowly	saara			
Toddling	saara			
Small	hedebu		hêdêb	ara/ari
Small	c'umbu			pisapis
Smallpox	gošše			
Smell, scent	sotoom			a-siim
I smell (tr)	sotoomi			jikh
Smile, to	munsam			
Smoke		c'imbi	ciimbi	a-kuď
Smoke			tooru (NS)	
Smoke (tr), to	hoob'a			
Smooth	ruuc'u			
Snake			paar / phaar (GO)	taša
Sneeze, to	c'imb'a			kowa c'isaŋ
Snore, to	dunk'u			kowa khoneʔ
Soft	laak'a			
Sole (of foot)	bicca b'e / b'e			bwam šok'
Sometimes	yut'ol sett			
Sorceror	ufe k'o			
Sort, ilk, kind	tuukan			
Soup	pe			
Sour	c'iiki			
Space between teeth	karten			
Sp. Antelope		goŋgoc		lee
Sp. Antelope		komi (MJ)		

" "		goŋgo		k'wandi?
Sp. Gazelle		maŋga (MJ)		a-ciš
Sp. Monkey		baju (MJ)	bêy	
Sp. Monkey, gureza		toď'i (MJ)		
Speak, to	appo			o
Speak quickly	jojo appo			
Spear	bak'k'e	bak'ee	b'ake	
Spear handle (shaft?)			gêre	
Spleen	medemet (Uduk)			a-mamaď'a
Split wood, to	badda (NS)			
Spotted	tetekaan			
Spread, to	faakki			
Spring (H2O)	tuunše			
Stab, to	ŋa			
Stand, to	hitta	hitta (imp.)	hitta	doš
" "			baalakit	
" '			poŋka b'aala	
Star	rooga		roga	a-cul
Star			marion (MJ)	aphphor jee
Step, to	goomu			
Stew	woď'i (AM)			
Stick			gum (MJ)	
Stink, to	bonc'a			
Stir (food)!	aŋan			
Stomach ache	c'oona			
Stone	maana	maana	maana / namma	woš
Pebble			jêwêt	
Strain	k'ii			
Stranger	tekkan ď'eb-be			
Strangle, to	akkiti			
Stretch self, to	t'iimee			
Stripe, vertical	geheraŋ			
Stripe, horizontal	boleleya			
Strong, hard	b'oogo			
Stumble, to (?)	fu bege[12]			
Struggle, to	abura			
Suck, to	du			k'uchur
Suck a pipe, to	kengese			
Suddenly	dingate (AM)			
Summer	c'ic'c'a[13]			
Sun	oha / oxa	ooha	oka/oxa/oha (KO)	
"			kaišet (error?)	a-tente
"			kacap "	

[12] First form = fall, [be] = `not', so basic meaning is `does not fall' or `did not fall'.
[13] This could be called `rainy season' or `dry season', depending on location, etc.

Sunrise, dawn	jaayn			k'aš
Swallow!	k'obu			los
Swear, to	woguy-eet			
Sweat	huppuna			jithi
Sweet	beelte			
Sweep!	agaal			
Swelling	aď in			k'uluš
Swim, to	liy-eet		li-eet (NS)	kaŋ yiď e
Syphilis	k'uuc'u			
Table	tarbiise (AM)			
Tail		sunď um	cundum	aras
Tail			şooşa (NOM)	θin
Take, to	uttuku			
Tasty	giď i			
Tasteless	giď i-be			
Teach!	itote			
Tear (with teeth)	haat'a (AA)			
Tender (of meat)	maaja			
Tendon	doono			
Testicle	hungu	uŋgu		emen
One testicle	hungu inki			
Thank (persons), to	naadit			
Thank (God), to	ageet/ag-eet (?)			
That		ŋa	ŋa / ŋati	chaan
That one				jantan
There	ŋanka			moonnii
They (see Pronouns)				
Thick	b'iili		mat	
Thick, fat	dondom			b'aphab'apha
Thief	ď ii	ď ii		
Thigh, upper leg			biša (NS)	wum
Thin	keeji		kêêjê	korakor
Thin	salsaln		hêdêbu	rephareph
Thing	ambc=		amp	ton/toŋ
Think, remember +	inon			
Thirsty, be	fari			
This	ma		ma/maši/mano/maka	yan
"			ŋa / ŋaŋum	
"			ney	
This one				yaase
These (right here)				gwahan
Thou (see Pronouns)				
Throat	huuruše			
Clear throat, to	guute			
Thumb	efi leta			kuman meď
Thunder			tikêt	awar

Tie!	hiippi				
Tired, be	omoke/omooke				
Tobacco		tumbayoo			
Today, this day	maa bees				šwane
Tongue	handa			handa (CU)	aleď
Tongue				k'add (NS)	
Tooth				kaw/k'aw (NS)	še?
Canine tooth	lewejan/lewezan				šeŋ-k'a
Incisor tooth (lower)					šem p'ena c'eš
Molar teeth					a-guje
Touch, to	aďaď'ap				
Town				katêma (AM)	
Trap, a	goomo				
Tree		k'onna		konna/k'ona (NS)	owa
Tree branch				roŋgi omd	
Trouble maker	buuja				
Trousers	bc=ntaale (AM?)				
Try, to	ida				
Try!	teecci				
Turn, to	getumba				
Umbrella	jant'ele (AM)				
Uncle, maternal	deend				šwakam
Uncle, paternal	wasil (OR)				?iiya
Uncle's daughter	kiya-malti				
Uncle's son	kaamay				
Uncultivated land	sa				
Under the tree (?)		šunšet			
Up hill / top	poonk / poont				
Vagina	bacce				
Vein, artery (?)	keer				a-šu?
Venus, evening star	bonboloti				nyaranycul
Vest	kanateera (AM)				
Village			weyska duk		
Virgin			tngoon (?)		
Vomit!	tappala				ya?
Wait! Stay!	k'orro				
Wake up, to	s'alla				
Walk, to	laak'a				
Walk slowly due to disease	goore				
Walk incorrectly, to	oppe				
Want, to	seenga		ind'-eet		
Warm			t'eema		
"			šuubu		
Warthog		eduga			a-wab'
Water, river, stream	wo	woo		wuâ/wo (NS)	wor (`wadi')
Water				wuď (↗?) (NOM)	yiďe

Waterfall	seyse			
Wave (H2O)	boodo			
Way	welace			
This way	ma welace			
We (see Pronouns)				
We men		yiŋ ul		
Weak	omoke			
Wear (clothing)!	eetta			
Wedding	tawwc=			
Week (1 moon)			kašap ink	
Weep, gurgle, to	kewwu			
Weigh, to	meezane (AM)			
Wet	mund'u		mundi (NS)	
Wet			k'inna	yaθayaθ'
Wet but ripe	kii-na išeet (?)			
Wet, cold				li?ali?
What?			nambi	ata
When?	hamb'ok		hambo	kakasja
Where?			hamat	
White	d'aac'a	d'aac'a	d'aaca	kuš
White			d'ada	taŋkuš
Who?			ne?ebe	aja
Who?			naafe / naape	
Who art thou/			kuk-ne	
Whore, prostitute	sent'a			
Why?			nambi ci com	gom-ata
Wide	boosu			
Wind, air			yipo (KO)	θ'am
Window	mastoot (AM)		alura / alsura	
Wing			tôbôrt	
Winnow (cf blow)	fifi			
Witness	miit'o			
Woman, female		umb'a/unb'a	umb'a / umba	kuman
Wife, fiancée	umb'a			ab'om, aš
Women (cf person)				uph
Womb, child house	c'oy aha			
Word			ap'oo	
Work			ijaagan	
Work	ijaagan (vb)		apuur (MJ)	
Work			?ada	
Work hard, to	d'oogun ijagaan			
World			bok (cf earth)	
Worm			munga	joole?
Wound	hayase			

Wrinkle, a	k'oy c'oona-we[14]			
Wrist	c'oobse			
Write, paper stab	worek'eto ŋa			
Year (cf dust)			takafut	yil
Yellow	mukungul	daama		
Yesterday	jaabu[15]	jabu / jabu get	jaal	katili?
You pl (see Pronouns)				
You men		anc ul		
Young breast	du c'umbu			
Young man (7-35 yrs)	atiyiiň			
Young woman, maiden				kato
Younger child	k'oondu			
Youngest child	ŋeetenee			
Youth (♂)			man	

NUMERALS

GLOSS in ENGLISH	{ ANBESSA	**SHABO** (MEKEYIR) AYYALEW	HOEKSTRA	} KOMAN UDUK
Count, to	ikom@%[16]			
One	inki	inki	oŋa yiinki	
One			om, ôm	ď'e?
"			ênka / iiŋki	
Two	bap	bab	bab, baba	su?, (iθneen)
Three	jiita (MJ)	jitaa	jiita	kwara, (θalaata)
Four	aŋan (ES)	aŋay	aŋan	doŋon
Five	tuul (MJ)	tul	tuul	muðeď
Six	tuul-a-inki	tula inki	tuula ôm	pe-ď'e
Seven	tuul-a-bap	tula bab	maha	pe-su?
Eight	tuul-a-jiita	tula jit	tuula jit	pe-kwara
Nine	tuul-a-aŋan	tul aŋa	tuula babai (?)	pe-doŋon
Ten	bap'-if	bab if	bab if	k'umeď
"			ufa-ka kor	ašaya (<AR?)
Eleven		bab if na inki	pe-ď'e? k'upha k'umeď	
Twelve		bab if na bab		
Thirteen		bab if na jita		
Fourteen		bab if na aŋgan		
Fifteen		bab if na tul		kharpac'
Sixteen		bab if na tula ink		

[14] Literally it says 'head cut was' or 'head cut been'. Here 'cut' is a somewhat different root from /c'ot-/
[15] But this also means 'tomorrow', hence it really means 'day next to this one, before or after'.
[16] See footnote 8.

Seventeen		bab if na tula bab	
Eighteen		bab if na tula jita	
Nineteen		bab if na tula aŋgay	kharpac' pe-doŋon
20	inki ufe koor	ink ufee koor[17]	
21		ink ufee koor na inki	
30	inki ufe koor bap'		
40	bap'ufe koor	bab ufe koor	is-suʔ
50	bap' ufe koor bap' if		is-suʔ k'upha k'umeď
60	jita ufe koor	jit ufee koor	
70	jiita ufe koor bap'		
80	aŋan ufe koor		isi-doŋon
90	aŋan ufe koor bap' if		
100	ď'ibba (OR)	bab ufee koor tul	isi muðeď
1000	kumma(OR)		(isi = body)
one third	jiita (batik) c'ota-de		(pe = and)
one fourth	aŋan c'ota-de		

PERSONAL PRONOUNS

GLOSS in ENGLISH	{ SHABO (MEKEYIR) ANBESSA [18]	AYYALEW [19]	} HOEKSTRA	KOMAN UDUK
I ♂	tiŋ	tiŋ	tiŋ / tiŋka	ahaʔ
I am ♀		taŋka		
I, female		inka umb'a		
Thou			ŋa-upa/ma-upa	
Thou			kuku	ʔe
Thou ♂		kuk		
Thou ♀		kuŋu	kungu	
Thou ♀		kunk umb'a		
He		yih	ŋa (cf `that')	
"			yi	
She		kotto	uŋ	
We		yiŋ	yiiŋa	ʔam / ʔaman
" ♂			yiŋ	
" ♀			aŋ	
" men		yiŋ ul		
You-plural, ye		anc	ŋaw	um
"		utala	peyêro	
You-plural, ye			subâk (error?)	

[17] This seems to equal `one person body'; the problem is that a body could be`21' (with head and 20 digits) or it could be ''23' (with genitalia and/or breasts). Along with Surma peoples, Shabo takes a body as twenty digits.
[18] Anbessa Teferra's pronouns were merged with Hoekstra's in 1989. Anbessa's tape has no grammar section.
[19] Ayyalew reports that gender is very important in Shabo; he tries to record it always.

You-plural, ye		sitalak (error?)	
You men	anc ul		
" women	anc umb'a		
They	sitalak/šitalak	kuka	uni
They		otala	
"		sitalak	
" ♀	oya (Ongota)	oda	
They ♀		subâk / şubâk [20]	
My, mine (error for `thy')	ku-ke		
My, mine	tin-ke		pem
Thy, thine	ku-ke		pini
Thy			cim
His			piti
His	yiik-ke		com
Her	ooŋge < {oŋg-ke}		com
Our	yin-ke		bam (incl)
"			bana (excl)
Ours			kum bun (inc)
"			kum bum (ex.)
Your (pl)	anci-ke		bum
" "	utala-ke		
Their	oca-ke		buni
Their ♀	koto-ke		
Me			a? / aa
Us			ab'i

SAMPLING THE GRAMMAR: AYYALEW MITIKU'S EFFORTS

Despite the difficulties of working with the famous Shabo informant, who remains nameless, Ayyalew persisted patiently and was able to get a rough sketch of Shabo's grammar. It bears a striking resemblance to Ongota in some respects, mostly verb phrases. But is quite different in others.

Noun Phrases

bak-ke c'eeka a hen's feather. Hen-of hair
kani-ke c'eeka a dog;s hair. Dog-of hair
matti lek they are big. Big are.
tin-ke-iif my hand. I-of hand.
tin-ke maati my father. I-of father.
tin-ke k'aw my gun. I-of gun.
ku-ke bak'e thy spear. Thou-of spear
yik-ke tawa. His field. He-of field

oca-ke kaan their dog. They-of dog.
koto-ke kaan their(♀) dog. They (♀)-of dog
minja-ke eršee a cow's milk. Cow-of milk.

but

t'iyito k'awî-ke a gun's bullet. Bullet gun-of.

and

šeem-e nena clothing louse. Cloth-of louse

(*Sans doute* a genitive marker taken from Gongan)

[20] Hoekstra also records for `they' two forms [hêdêbu] and [kêêje] which have other meanings in all three corpora.

ooŋge-ke ɗ'oku her house. She-of house.
yin-ke šeemo our cloth. We-of cloth.
utala-ke k'ufu your children. Ye-of children
[21] boku-takan on the earth, on the ground
beero-y takan in the bed, under the bed (The suffuxed [-y] is unexplained but appears a case ending)

ɗ'ok tak in the house. House in.
wo takan in the water, in the river. Water in.
t'êrep'eza poont on the table. Table on.

Simple Verb Phrases

Copula Absent		
tiŋ	\	I am good
kuk	\	thou art good
yih	\	he is good
kotto	ɗ'anka	she is good
yin	/	we are good
anc	/	ye are good
sitala	/	they are good

Simple Verb Conjugation in one Tense	
tiŋ t'ah	I eat, I am eating
kuk t'ah	thou eatest, thou art eating
yih t'ah	he eats, he is eating
umb'a t'ah	she eats, she is eating
yiŋ t'ah	we eat, we are eating
anc t'ah	ye eat, you (pl) are eating
sitala t'ah	they eat, they are eating

kuk-nee	Who art thou ♂?
kuŋu-ne	Who art thou ♀?
uŋu-ne	Who is she?
sitala-k ne	Who are they?
umb'a ne-ge	Who are (those) ladies? (woman-who?-plural)
tiŋ b'aala	I go, am going
kuk b'aala	Thou (♂) goest

tiŋ woo	I am drinking
kuk woo	Thou art drinking
yih woo	He is drinking
umb'a woo	She is drinking
yiŋ apuŋ woo	We are drinking ([apuŋ] meaning?)
anc woo	You (pl) are drinking.
sitalak woo	They are drinking
umb'a woo	They ♀ are drinking
oya woo	They ♀ are drinking

More Complex Verb Phrases

tiŋ b'aala-be I go not, I'm not going ||| hamaka ge-k no-k jaab Where did you go yesterday?
kuk b'aala-be Thou goest not, art not going ||| tiŋ ogula jaabu-get woo I will drink tej tomorrow. (Or `I drank tej yesterday'.) (Cf `yesterday' and `morning')

tiŋ ɗ'ebe geti t'ag	I will eat
kuk " " "	thou will eat
yih " " "	he will eat.
oŋga " " "	she will eat.
yiŋ " " "	we will eat.
anc " " "	ye will eat.
sitalak " " "	they will eat.

Note: the tense differences in the verb [t'ag] or [t'ah] – future versus present, reflected in the different consonants of the verb roots in each tense, viz., [-h] versus [-g]. That difference cannot be accounted for phonetically. [h] and [g] are not allophones of one phoneme. In fact [h] is a variant of the /k/

[21] Ayyalew originally recorded [d'oku takan] which would mean `in the house, inside the house', but the meaning `earth' persuades that the initial consonant was [b] or even [b'] instead of [d']. It is an easy field error to make.

tiŋ jabu get wo-ge	I drank yesterday
kuk " " "	thou drank yesterday
yih " " '	he drank yesterday
umb'a " " "	she drank yesterday
yiŋ " " "	we drank yesterday
anc " " "	ye drank yesterday
sitalak " " "	they drank yesterday
oya jabu get wo-ge	they (♀) drank yesterday

phoneme; also [x] which underlies [kh].

An attempt at tense differences:
wo present tense root of `to drink'
wo-ge past tense root of `to drink'
get wi-ge past tense base of `to drink'
get wo future tense of `to drink'

REVISITING THE TAXONOMIC QUESTION

Since the Bayreuth conference in 1989 where the Shabo is Nilo-Saharan thesis was presented, several other opinions have been offered. Bender rejected Fleming's thesis and argued for Shabo being either Omotic or related to it. Somewhere near that time he proposed that Shabo and Ongota were mixed languages or maybe pidgins. Christopher Ehret proposed several years ago that Shabo was a singular phylum, not related to any other in Africa. More recently he is alleged to have said that Shabo was probably coordinate with Koman within Nilo-Saharan. If that is truly his position, then it agrees precisely with what I said at the Bayreuth conference. Finally, the new data on Shabo do not seem to contradict the Nilo-Saharan hypothesis. However, neither Bender nor Ehret have seen the new data, so their new opinions are solicited. But more work needs to be done to focus sharply on the question of what Shabo's true relationship with Nilo-Saharan is, because it surely is not very close to any other branch or sub-phylum of Nilo-Saharan.

Herewith are some proposed etymologies to show Nilo-Saharan and Afrasian cognations with Shabo. One remarkable thing about Shabo is that it shows some very old or archaic ties to both phyla – in sufficient strength to justify hypotheses of genetic connection. In one case `tongue' Shabo has a form which resembles the proto-Nilo-Saharan form, to wit, k'add versus *k'alt , while another word for `tongue' handa resembles old South Cushitic *ʕanda `tongue' and Ongota ʕada `to lick'.

Here follows a search for Shabo's genetic relationship, if any, with Afrasian and Nilo-Saharan. Ties to the Nilo-Saharan etymologies in Greenberg (1963) are sought firstly so as to avoid controversial recent proposals.

A. NILO-SAHARAN RESEMBLANCES

(Shabo
form with meaning)

kêp `arm, shoulder'

Songhai: Gao kamba, Djerma kamba
Saharan: Daza kôbê, Berti abi, Zaghawa ba
Maba abi / bi `shoulder'
Koman: Koma (Madin) kwop, Uduk k'uphbi `shoulder',[22]
Uduk (Twampa) âbi
proto-Nilo-Saharan *(k^{h})abi `upper arm' (Ehret, PC)

[22] The first Uduk is from Beam and Cridle, our best source on Uduk. This Koman form was also borrowed into Nomotic Ganza *kwopa* `arm' and Sezo *kwabbe* `shoulder'. Greenberg erred in merging Gunza, a variant of Gumuz, with Ganza an Omotic language, since there was no published data on Ganza at the time he wrote.

funk'a / punk'wa `ashes'	Koman: Beica pikin, North Koma pikîn, Anej ufun, Kwama p'ek'în proto-Koman *pik'in (Bender, PC)
kosa / koš `bad'	C-S: Kabu kasu, Kreish gosidi, Moru kozi-ro, Logo kônzi, Keliko ônzi, Gulai ose E-S: Nile Nubian: Fadidja uuz, Mahas, Dongola uus, Old Nubian akossi, Kenuzi uus / kos Surma: Didinga gasi Nara (Barea) koš-ko
šamum `beard' (< Majang ?)	proto-E-S * θaam (Ehret, P.C.) E-S: Surma: Suri camun (Abink) Tirma čamon (HF), Didinga camón
bêêro `bed'	proto-C-S or common C-S mbed (Bender, PC) (And of course, English bed, German bett!)
mat / matti `big, thick'	proto-Nilo-Saharan *mad' (Ehret, PC)
p'iida / pilla / b'illa `to bite'	Berta piid'a
kowan `breast (of woman)'	proto-Nilo-Saharan *ako + *-an (noun suffix) (Ehret, PC) E-S: Nubian Debri ôku, Kadaru ôko, Kenzi og, Nobiin og Koman: Uduk (Twampa) ako `breasts, udder, milk', Langa kwoi, Gumuz (Disoha) kuuwê
tam `bring!	proto-Nilo-Saharan * ʈam `put out hand to get' (Ehret, PC)
kiik `claw'	proto-Nilo-Saharan *keeg `to scratch' (Ehret, PC)
c'ota `cut; cross (water)'	Koman: Uduk c'it^{h} `to cut, amputate; cross path or water'
ka$^{?}$al `dog' (archaic)	proto-Koman *k'au (Bender, PC) Koman: Gumuz k'awa, Gumuz (Disoha) k'owa, Uduk àk'á

(The dominant form in Shabo is [kaan] or [kana] as in some Koman languages, both presumed to be borrowed from older Nomotic, not from more recent Gongan or Dizoid forms.)

boka / bok'k'u `earth, soil,	Koman: Lunga buka `ashes, ground'
t'a-g/h `to eat', `to bite'	Koman: Uduk t'wa `mouth', North Koman t'ôwa `mouth'
godo `elephant' goode umb'a `elephant '	E-S: Surma: Majang gooro `bull elephant', Mursi ŋorio, Kwegu gádi `big male elephant'

(A localism but not necessarily a borrowing, i.e., fortuitous common retention in a limited area.)

se / şe / še `eye' — Koman: proto-Koman *zi (Bender, PC), Asosa Komo zi$^{?}$, Langa jii / žiai, Opo je, swi, Gumuz ca
Maba si

(Note: This very conservative word is limited to Koman, Maba and Shabo, which suggests either old retention, old borrowing, or a special relationship. Maba is found in far away Dar Fur.)

kaya `fly (noun)' — E-S: Nubian: Mahas, Dongola kul-ti
Surma: Didinga, Murle, Longarim kiroŋit
Nyima: kwêlêŋ , Afitti kwôlâŋga
Nilotic: Bari kadongonti, Nandi kaliaŋ

(This form proposed by Greenberg in 1963 requires a correspondence of Shabo [-y-] with Nilo-Saharan [-l-] or [-r-]. It may be false.)

kent-eet `foreigner'
{kemt} + {eet} — E-S: Nara (Barea) hömet / hömena
Nilotic: Dinka kaman, Shilluk kemo `to visit',
Bari komonit

aŋay `four, 4' — E-S: common Nilotic aŋan, Surma (the same)

b'al / b'aal `to go' — Songhai: Djerma, Timbuktu farta `go out'
C-N: Kunama foro `go out'
E-S: Nubian: `go out' Mahas fal, Dair bal, Old Nubian pal
Gaam (Tabi) pala `go down'
Nilotic: `go out' Shilluk welo,Dinka fal `leave',
Bari wala

no `to go' — proto-Nilo-Saharan *n- (Ehret, PC)
walla `goat' — proto-Nilo-Saharan *wel (Ehret, P.C.)

wuya `granary' — proto-Nilo-Saharan *wêy `grain' (generic) (Ehret, PC)

if / epu `hand' — `arm': Berta boe
E-S: Surma: Didinga iba, Kwegu buá
Koman: Uduk abi-n `arms', in [abi-n tente] `sun beams'
= `arms of sun'

k'oi / k'oy `head' — Koman: Gumuz k'wa, Uduk k'u `head of dead sheep, etc.' & k'up^{h} `head'

(Note: Omotic Shako and Maji have [k'oi] `one' which is not as convincing semantically as it is phonetically.)

apura `hole' — Saharan: Daza bolo, Aza buru
C-N: Kunama aburr, Berta boro
C-S: Mangbetu polo, Lugbara b'urô
E-S: Lango bur

hob'u `hot' — E-S: Kuliak: proto-Kuliak *hab', Ik hab', Tepeth ab',

gaama `jaw' (nigem `chin' < Majang)

`chin' Songhai: Djerma kabe, Gao kaba `beard'
Saharan: Kanuri gumi, Daza, jaɣam `to chew'
C-N: Kunama goma `jaw, chin, beard'
C-S: Kreish ušammo `chin'
E-S: Nile Nubian: Kenuzi, Dongola jakum
Gaam (Tabi) ijum `beard'
Nilotic: Bari nyêkêm `chin, jaw', Lotuko êjôxôm `chin', Suk ŋacam `chin', Dinka gem `chin', Nuer jyom `cheek'

But also Afrasian: Omotic: Dizoid (Jeba dialect) gagum `jaw, chin'. Jeba is not far geographically from Majang.

kutti / hutu `knee'

proto-Nilo-Saharan *kudt < *kud `to bend' (Ehret, P.C.)
(It seems not well supported by the evidence)
Saharan: Zaghawa kurru
Maban: Maba kikkirŋi
C-N: Berta kudu, kusu
C-S: Mangbetu kati
E-S: Nubian: Mahas, Kenuzi kur-ti; Dilling kute, Kundugr kuttu
Surma: Murle koðoŋ , Longarim kuðuŋ, Bale kušuŋ-at
Nilotic: Nandi kutuŋ , Tatoga guduŋ-da

c'am `leaf'

Koman: Uduk c'emen

hab'a `lie down, sleep'

Songhai: Gao hahaabu `yawn, sleep'
Saharan: Kanuri bo
Maban: Maba abi / bi
C-N: Kunama abe
C-S: Mangbutu ubu / abu, Mbai, Madjinngay bii, Dindje, Kaba bi, Efe abuabu, Kreish bibi, Lese k-abu
E-S: Nile Nubian: Dongola, Kenuzi bu, Fadidja fii
Merarit ab-(ney)

deeppe `lion'

E-S: Surma: Majang d'epe

deepee umb'a `lioness'

Koman: Uduk aðop^{h}

(Note: Both Shabo and Majang forms are isolated, so that borrowing from Majang is not necessarily required.)

cukuma / sukuma / šuk'uma / jukuma `liver, belly'

Koman: Opo c'okom, Shiita (Langa) c'ok'om

ulu `man'

`male' Songhai: Gao aru
Saharan: Daza oro
E-S: Nubian: Midob erre

Nilotic: Lotuko allê / alyawa,
Turkana (eki)-li, Masai ô-lê
Surma: Muguji huur / wurr `man',
Tirma hiri `person'

ga `to mate (of animals)' Koman: Uduk ha$^{?}$ / hak' `to mate, interbreed'

ill `milk' C-N: Berta: Fazoglu err, Sillok iiri
E-S: Nile Nubian: Kenuzi er-/ir-ti
Surma: Didinga iira
Nyima elo, Afitti ôlô
Nilotic: Bari lê, Teso aki-le, Turkana aki-li, , Masai kûle

wuŋka / iŋkaye `name' E-S: proto-Daju *aŋge
Nilotic: Anuak ňiŋ

nôôdô `neck' E-S: Surma: ŋud'e

co / tso `new' Koman: Gumuz cica

up^{h}a `person' Saharan: Kanuri bi `male', Berti fa `husband, man'
Fur: aba `husband'
C-N: Kunama abe
C-S: Mangbetu mbi `person', Keliko, Lugbara b'a `person', Lendu ba
E-S: Nilotic Lotuko x-aba `husband',
Tabi -fui / -fiuk `male'
Koman: Opo opuo (self-name), Shiita (Langa) opuo$^{?}$, Uduk up^{h} `woman'.
(Note: Bender gives proto-Koman *ba which is rejected here as unsupported by the evidence.)

jak / jah `pot' E-S: Surma: Murle ijuh, Suri jú$^{?}$

d'im / d'imm `rain' Koman: Chiita diba, Shita (Langa) diiba, Gumuz dama/damma, Sai dàma
(possibly) E-S: Nilotic: Dinka de

com / som `sand' proto-Nilo-Saharan * şom- (Ehret, PC)
(Note: The /ş / is a retroflex which corresponds perfectly to Shabo's probable underlying {ş}. Cf `say' below and `nose' for other cases. Often [š] is another allophone, with [c] and [s].)

com / sum `to say' proto-Nilo-Saharan *şom (Ehret, PC)

baayo `sing' `to dance':
Saharan: Teda abi (noun)
Koman: Koma baa (noun)
C-N: Kunama ba
C-S: Mangbeta obe, Mamvu ube, Lendu be
E-S: Nile Nubian baane

tooru `smoke' Saharan: Gao, Djerma dullu
Koman: Gule dyurret
E-S: Nile Nubian tulli
Nilotic: Dinka tol, Nuer tuol

badda `split (wood)' E-S: Nile Nubian: Mahas, Fadidja fag, Kenuzi, Dongola bag
Nilotic: Bari pâggu, Lotuko ppêk, Shilluk paaŋ , Nuer bak
C-N: Kunama fak
(Note: This seems erroneous; it is only included on the assumption that the Shabo form is underlyingly {bag-da}.)

gum `stick' Majang gumboi `club'
Koman: Gumuz (Sai) gomba

oka / oxa / oha `sun' Koman: common Gumuz oka

lieet --> li-eet `to swim' Majang leyêt
proto-Nilo-Saharan *lêy `become wet' (Ehret, PC)
Koman: Uduk li$^{?}$-a-li$^{?}$ `wet, cold'
(Note: Both Shabo and Majang forms are isolated. Since the Shabo can be segmented to a root [li] plus a common verb suffix [-eet], it is more likely to be the source than is the Majang. Or the Shabo may have made a folk etymology for a Majang word and generated the [-eet] themselves. Less likely links can be found in Cushitic, to wit, Beja l$^{?}$a `cold' and Saho lay `water')

k'add `tongue' proto-Nilo-Saharan *k'al `eat' --> *k'alt `tongue'. (Ehret, PC)
C-N: Kunama ŋeelaa
Berta: Sillok, Malkan kula, Tornasi unkala, Fazoglo halad
C-S: Mangbutu kadra, Mamvu kedru, Mongbutu kadru,
Lendu leda (?)
E-S: Nubian: Garko jalde, Kondugr jaldu
Gaam (Tabi) kalat
Merarit laat
Dagu (western Kordofan) kuldaŋ

kaw k'aw / khaw `tooth' C-S: proto-C-S *kwa (Ehret, P.C.)
k'aw-ge `to bite' proto-Nilo-Saharan *k'ay `bite' (Ehret, P.C.)
kaw / k'awut `mouth' E-S: `bite' Surma: Kwegu kaw , Bale kauwa, Majang kaw-k
Koman: Uduk k'a `chew, gnaw or eat meat, corn, peanuts'

k'onna / konna / k'ona `tree' E-S: Nubian: Birked kaan
Surma: Didinga kêt / kêna, Tirma kiano
Merarit kidi / kiŋ
Nilotic: Masai ol-cani, Nuer jiat / jên, Shilluk yat / yên
Lotuko (nâ)-yâni
Kuliak: Tepeth kêên `wood for house'

silla `urinate' `urine': Saharan: Kanuri collo, Kanembu njelli
Maban: Mimi (N) saar
C-N: Kreish soddo, Berta sara
E-S: Surma: Didinga ðolo `urinate'

bacce `vagina' Songhai: Gao buti, Djerma bute
Koman: Koma Madiin bitt, Ganza pit

ne `who?' Saharan: Daza nya
Maban: Maba nyia
C-N: Kunama na `who? which?'
E-S: Nile Nubian: Mahas, Fadidja na, nai, Kenuzi, Dongola ni
Surma: Didinga ŋani, Nara (Barea): na, nan,Nyima: ŋa ;
Merarit: na
Nilotic: Nuer, Dinka, Anuak, Lango ŋa
Karamojong ŋai, Bari ŋa, Lotuko ŋai

naafe / naape `who?' E-S: Surma: Zilmamu naape

umba / umb'a `woman' proto-Nilo-Saharan *mbwa `to give birth' (Ehret, PC)
proto-Koman *b'amb `woman' (Bender, PC)
Koman: Uduk ab'om `wife, woman'

B. RESEMBLANCES TO BOTH PHYLA

ke `of ' Pronoun suffix Koman and Nilo-Saharan
Omotic

b'ec'c'a `beard' Nilo-Saharan: C-N: Berta bus
C-S: Kreish bibusu, Mangbetu busu `white hair'
Koman: Gumuz bes, Ganza (E.Koma) ponzo, Ganza (Gwama)
puunzu
Usually presumed to have been borrowed into Afrasian:
Ongota buše `beard' (Probably a loan), biidâ `beard' (Probably
native)
East Cushitic: Tsamai buuše `beard', Gidole páác'á-t `beard'
Nomotic: common Ometo bucc- `beard', Mao: Hozo p'uutse,
Sezo poose `beard'
Somotic: Dime bâtsi, Hamar buuši, Kara booci

k'êndi / kendi `cold' Nilo-Saharan: E-S: Nubian Gulfan, Dair kid
Merarit kiiri
Nilotic: Nandi kaitit
C-N: Kunama giggida
C-S: Moru kid'i, Mamvu ketu
Saharan: Teda kiri-de, Daza kiri

Maban: Maba kera
Afrasian: Somotic: Dime k'îžîn & ʔîzu `hail', Galila k'aži,
Ubamer qaži / ʔaži, Hamar k'aji, Kara k'aža
Nomotic: Dizoid: Maji k'ec-us
East Cushitic: Alaba k'iiza, Sidamo k'ido, Hadiyya k'iid
Central Cushitic: Agau Bilen k'wîta-xw `wet'
Semitic: Ethiopic: Amharic k'zk'z `be cold'

be `not'. Verb suffix. See Greenberg's Nilo-Saharan and Chari-Nile Morphological Elements # 46
`Verbal Negative in **m** or **b**. Kanuri ba, Fur a..ba; E-S: Nubian m-, Surma: Didinga ma, Merarit m-, Nara (Barea) ma, Dagu of Darfur ba, Nilotic: Shilluk ba.
However, this is also found in Afrasian in equal strength. For example, Ongota has both ma and mi in verbs and baa for `no'.[23]

jigu `bull' — Majang and Omotic, but ultimately < Omotic.

aha `house, hut' — Forms like /aha/ are more common in Afrasian, including /h/ in Egyptian, while forms like /aka/ are more common in Nilo-Saharan.

C. AFRASIAN RESEMBLANCES

nap'p'a `lick! taste' — Nomotic: Gongan: Mocha, Kafa nap', Shinasha lê'p'a
Mao: Diddesa nep'il, Hozo nep'le

minja `cow' — Nomotic: Gongan, common South Gongan

b'unc'u `(to) peel. — Nomotic: Gongan: Bosha fuc'e `peel bark'
Gimojan: Chara poš, Yemsa (Janjero) fooca `bark',
Mao: Diddesa p'ins'e `sp. tree with special bark',
Dizoid: Shako baac'i `skin'
Somotic: Hamar póóša `peel!', Kara pooša `to skin by pulling'

indii `mother' — common Omotic and found widely in Afrasian.
Also occurs in Meroitic and Nubian, possibly as loan words from Beja or to Nubian and/or Beja from Meroitic.

sina `honey' — Nomotic: Dizoid: Adikas íísin `honey'

c'aara `red'
As `blood' this is confined to Iraqw, Gorowa, Alagwa and Burunge. All other members of South Cushitic, except Dahalo, have another form. As `red' it is nearly universal in Agau, as follows: (Awngi lacks it), Dembea **tsara-** , Qemant **sara-** , Khamir **ts'ir / zir**, Khamta **sâro**, Bilen **sara-ux.** (Glottalized [ts'] has become rare in Agau). In Dahalo recorded

[23] Global: *cf.* Proto-Caucasian ***ma*** (prohibitive); Proto-Sino-Tibetan ***mă(H)*** 'not'; Indo-European prohibitive ***mē*** (> Greek μή, Armenian *mi,* Sanskrit *mā*), etc. (= Greenberg's Eurasiatic "Negative M"): see also Bomhard's and Thornton's articles in this issue. Ed.

several times by highly competent field workers, we have `red' as **ts'írara$^{?}$-**. It is absent in Mbugu, Asa and Qwadza, changing then to `blood', as follows: Iraqw **ts'eere**, Gorowa **ts'eere**, Alagwa **c'eere**, Burunge **c'eede**.

handa `tongue'

Proto-East Cushitic * $^{?}$ent' `lick, nurse' (Arvanites)
South Cushitic: Dahaloan
^{c}ééna `tongue' Dahalo
^{c}anć : ^{c}ants'- `to lick' Dahalo where the [ć] represents a dental click (Tosco)
^{c}aća : ^{c}ats'a `to lick' (Damman)
South Cushitic: Mbuguan
lu-$^{?}$ánda `tongue' Ma'a (Mbugu)
South Cushitic: Rift
ondalimo `tongue' Qwadza

Ehret (1980) reconstructs proto-South Cushitic /*^{c}anda/ for `tongue' which looks cognate with Ongota /$^{c}$ada/ `to lick'. The more developed form for Ongota `tongue' or /^{c}ada/ + /ba/ also has cognates in Omotic and Kuliak (Nilo-Saharan).

Ongota Lexicon: English-Ongota

Harold C. Fleming[1]
Gloucester, Massachusetts, U.S.A.

Foreword: The Ongota language, spoken in southern Gemu-Gofa (Ethiopia), in the valley of the Woito river, has been previously reported.[2] However no English-Ongota glossary was given in that article, although there is an Ongota-English glossary therein. Subsequent to the original research on Ongota which was carried out in 1990 in situ and published later, field workers from the SLLE group of Addis Ababa University recorded and published about 150 words of Ongota. This was followed more recently (2001) by about 62 words recorded by Sava and Tosco and announced in a paper given at the Ethiopianist conference in Addis Ababa. All are incorporated in the present glossary. Additional data on Ongota have apparently been collected by Sava and Tosco but they have not communicated such to me.

Opinions now vary as to the position of Ongota in African linguistic taxonomy. Ehret's most recent classification (personal communication) has Ongota as a coordinate of Omotic within Afrasian. Bender dismisses Ongota as a mixed or pidgin type. Václav Blažek (personal communication) believes it to be Nilo-Saharan, and Sava & Tosco (hearsay) believe it to be a pidgin of some sort. So again a presentation of the greatest amount of data will help settle these matters.

The classification that follows is one I worked out in 1996.

A New Afrasian Taxonomy (1996), incorporating Ongota

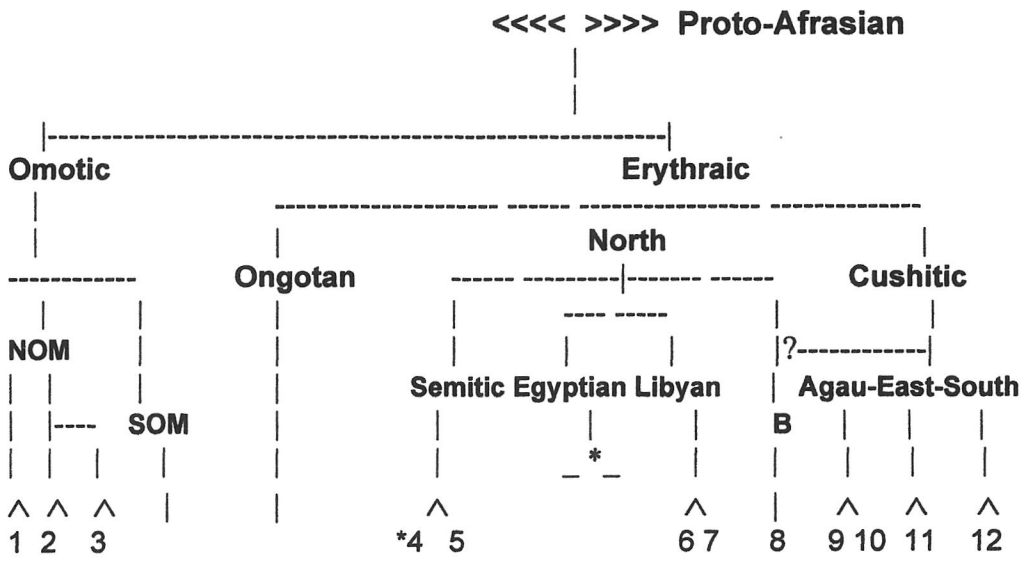

(1) = Dizoid, (2) = Mao, (3) = 'ta/ne', (*4) = East or Akkadian, (5) West or the rest, (6) = Berber, (7) = Chadic (West, Central, East), (8) = Beja, (9) = North Agau, especially Bilen, (10) = South Agau, (11) = Highland, Lowland, Dullay and Yaaku, (12) = Dahalo & Mbuguan-Rift.

[1] Former ASLIP President, Professor of Anthropology, Boston University.
[2] See Fleming, et al. 1992. *Journal of Afroasiatic Languages*, Vol.3, Number 3, 181-225.

Ongota Lexicon: Alphabetized by English meanings

Note: & = cited by Sava & Tosco, # = cited by SLLE

Grammemes:

ADJECTIVE SUFFIX, FORMANT, FOR COLORS	muni/-mone
NEGATIVE, NOT (WITH NEGATIVE IMPERATIVE)	inti / înti / inta
NO! (INTERJECTION)/ NONE	baa$^{?}$ / baa
NOUN SUFFIX, AGENTIVE, INSTRUMENTAL	-mi / -me / &-me
NOUN SUFFIX, CONJUNCTION, and	-na
NOUN SUFFIX, INSTRUMENTAL	-$^{?}$u
NOUN SUFFIX, LOCATIVE	-tu / -to
NOUN SUFFIX, LOCATIVE	-ka / -ke / -ki / &-ke
NOUN SUFFIX, LOCATIVE, below, under	-zala
NOUN SUFFIX, LOCATIVE, to, towards	-jaara
NOUN SUFFIX, PLURAL (or stative verb)	-wa
NOUN SUFFIX, POSSESSIVE/GENITIVE	-tâ / -ti
NOUN SUFFIX, SINGULAR or STATIVE VERB	-ita
NUMBER SUFFIX, UNKNOWN FUNCTION	-bano
PRONOUN SUFFIX, PLURAL OBJECTS	&-ku
PRONOUN SUFFIX, FEMININE OBJECT, to her	-ta / &-ta
PRONOUN SUFFIX, MASCULINE OBJECT, to him	-na / &-na
VERB PREFIX, NEGATIVE IMPERATIVE	ma-
VERB PREFIX, NEGATIVE, NON-IMPERATIVE	mi-
VERB PREFIX, PASSIVE	a- / &a-
VERB PREFIX, PRONOUN, 2ND PERS.SG.	i-
VERB ROOT, UNKNOWN MEANING OR FUNCTION	-$^{?}$ida-
VERB SUFFIX, CAUSATIVE	-san / -šan / &-san
VERB SUFFIX, CAUSATIVE, (< Tsamai)	&-is
VERB SUFFIX, GERUND?, PROGRESSIVE	-utto
VERB SUFFIX, IMPERATIVE, PLURAL	-ta
VERB SUFFIX, JUSSIVE, let us!	&-itu / -tu
VERB SUFFIX, PASSIVE	-tam
VERB SUFFIX, PASSIVE OR INTRANSITIVE	&-am
VERB SUFFIX, REFLEXIVE (from Tsamai)	-ad'
VERB SUFFIX, REFLEXIVE	&-at
VERB SUFFIX, REFLEXIVE	&-i$^{?}$
VERB SUFFIX, TENSE MARKER	-e / -i
VERB SUFFIX, CONJUNCTION, and	&ba
VERB SUFFIX, INFINITIVE MARKER	&-o

aardwolf, Spring Hare / Spring Hare	qalate / $^{?}$alate
able, be (*cf* 'be possible')	$^{?}$algas
able, thou art; thou can	$^{?}$i-$^{?}$algas
Adam's Apple, to swallow	aŋgarka
add, add to, to	&fâ$^{?}$a
aim at, to; take aim at	$^{?}$i$^{?}$a
all	b'ad'd'e / #bad'd'i
Amhara	fuga / pfuga
and (NOUN SUFFIX)	-na

and, then, so	bu
animal (*cf* `lion')	#ʔoxaya
ant, big black	d'axa
small ants	râᶜo / raᶜo
ant	#moiyolee / #moyyolee
anteater	góódu
Arbore (*cf* Tsamai for same word)	rumate
Arbore	arbore
Ari / Aari (*cf* Banna)	bača
armpit	baaro
arrive, to (*cf* `to reach) (from Tsamai)	&daggab
arrow	fald'i / falíʔ / pald'o
arrow (*cf* Tsamai)	tebele
the arrow stung	tebl-mi ki-raᶜe
ashes	táuni / #taauuni
ask, to (*cf* Tsamai)	#gaačaXti
axe (*cf* Tsamai [urgayo])	irgaᶜa / irgaʔa / #ʔirgaʔa
baboon	dááb'aša / d'abaša
baby	maara
baby baboon	naʔa / naʔasu
baby cried	naʔa booni
baby warthog	naʔa gaʔšo
baby, offspring (Formally like Tsamai)	otoko
baby dog-of, puppy, whelp	otoko k'aski-ti
back, upper	lêpša
back, lower	kâlku
backbone / back	bágado / bagada, #bagada
bad (*cf* jealousy)	adala
bad, crooked (*cf* `dirty')	#ʔadala
bamboo pipe	warka
banana (*cf* Amharic, *Wanderwort*)	muusi / #muz
Banna (*cf* `Ari')	baša
bark, to (*cf* `scream, shout')	#riri
bark of tree	aqata goiti-te / aqatagoite
bark, inner bark	kááda / káád'a
bark, outer bark	ʔag'ate / aqata
bark of tree, outer (Lit. = skin of tree)	#darbo hanša-ti
bark? (inadequate translation)	gurče
barley (*cf* Tsamai)	borto
basket (*cf* Arbore)	kodu
bat (not the Tsamai form)	waʔko
bat (*cf* Tsamai [xibide])	#xibiri
beads	q'ala / qala
beak	ʔíífa karbo-ti
bear a child, have a baby, to	xod'i / xodi / #Xodi
beard	buše
beard (it may be the native word)	#biidâ
beat, to, strike	hoo / hoʔ
bed	koora
bee, bumble	ʔinnako

small bee, flea, small fly	innako
one fly	ʔinako kalbam
beehive	gorgora / #gôrgora
beer, Oromo variety [farso] (*cf* Ari)	góóla / gòòla
belly (*cf* Hamar `lower belly')	búúsa / #buusa
bend down, to	gurri
beside (something). Preposition	demiti-to
bicep (muscle)	mâgî'nti
big (but *cf* `wide')	arba
big (but *cf* `many')	gadaxune / gadahune / #gaddahino
Birale (outsider's name for Ongota)	bîráále
bird (*cf* Surma & East Sudanic)	karbo / karbu
bird (*cf* `fly,to')	#ʔaHáyá
bite, to / I bite	gaᶜa / #ka-gaʔ
black, blue	d'ak'-muni / dakka-mone / #dag'a-munâ
blacksmith	gitama
bladder	fugo / fuuge
puff, to; puff out, to	fug-ad'
bleed, to (*cf* hand bleeds)	ilkato
bleed, to (intransitive)	d'ubak'am / dubaqam
blind (*cf* Oromo or Dullay)	b'alaʔato
blink, to	daf
blood	šoxo / šuxo / šoho / šaho
blood bled	šuxo d'ubak'am /šoxo dubaqam
blood of ox, ox blood	šuxo raᶜasa
blow, to / blow!	fusaa / fuusaa
blow, to (*cf* Tsamai)	#ʔupi
blow (one's) nose, to	ípása / ippassa
boat, canoe	#gabata
body	bíša
boiled	foolisa
bone	mič'a / #miča
born, be	ʔa-xod'e
bow (of bow and arrow)	ʔooma
bow (*cf* `arrow')	#faldo
box (*e.g.*, for snuff tobacco)	šuulo
box for tobacco	šuulo dampu-te
boy	jaʔaka
boy (*cf* male)	šokuta
brain	nóólu
branch (*cf* Tsamai)	zêmitti
breast (woman's) (*cf* suck)	ʔaama / ʔamama (pl) / #ʔama
bridge (*cf* Tsamai & old South Ethiopic)	#dildila
brown	#moora
buffalo, Cape buffalo	baya^{c}a / #bayyaʔa
buffalo is killed (translation error)	baya^{c}a jiʔa
bull	muumi
bull (*cf* Tsamai)	horonko

bullet (*cf* Amharic)	s'iiti
gun's bullet	s'iiti ki č'awi-te
burn, to (intransitive)	k'ow
burn, to / it burn	#xau / ku-xau
burn, to (intransitive)	k'awadi / qawad'
burn, to (transitive)	k'oyka
burp, belch, to (maybe *cf* Tsamai)	ge^{c} / ge^{c}q / &gé^{c}
burr, burdock	č'âbîlg'o / č'âbîlâg'o
bury, to (*cf* old man)	$^{?}$adiban
burial, grave	#$^{?}$aadiba
bush pig, Giant forest hog / pig	iláášа / #$^{?}$ilaša
butt, to (*à la* goats butt heads)	hok'omi
butter (*cf* Tsamai)	šu$^{?}$una / šú$^{?}$nna / &šu$^{?}$úna
buttock, backside, rectum, ass (baboon)	tuuli / túle
buttocks	#sorraida
buy, to, sell, to	#šin
by, with, by means of (NOUN SUFFIX)	mi / me
cackle, to	kokuyi
she cackled	ko-kokuyi
calf (leg) (*cf* Tsamai `shin, shank')	zooli
calf bone (leg)	zooli mič'a-te
calf muscle (of leg)	sárba
caracal (feline) (isolated in Tsamai)	górjo
carry on shoulder, to	taxe$^{?}$ / taqe
carve, to	xaši
carve wood (1st part < Tsamai)	garko xaši
cat, Kaffir cat	gúrlu / #gurlu
catch, to (a phylum cognate for Nostratic)[3]	qáfi
centipede	hangararo
chest, breast, thorax	híoka / heoka
chest (of body) (*cf* Tsamai)	^{c}ééro / $^{?}$ééro
chew, to (*cf* Dullay)	k'ani / qani
chicken, hen, fowl	baaša / baša
chicken (*cf* Tsamai)	lukalli
child / children	$^{?}$íila / iila
child	na$^{?}$a
infant, small or tiny child	na$^{?}$a mod'une
child (*cf* `baby')	#maara, &mara
chin	gawsa / gausa / #gausa-kalbano
choke, to (*cf* Tsamai)	nig-ad'
civet cat, pole cat (maybe skunk too$^{?}$)	duka dukó
clan, lineage (*cf* Tsamai)	gaf-ko
clap (hands), to	{Ho$^{?}$i}
claw, fingernail	sokai
claw (the dominant form)	soŋk'e / sonqe
claw	#kinnâ

[3] *Cf.* Indo-European **kap-* 'grasp' (Lat. *capio,* Gk. κάπτω, Eng. *have,* etc.); Uralic **kappV-* 'seize'; Altaic **k'ap'V* 'seize, hold'; Dravidian **kav-* 'seize (with hand), catch'; etc. [Ed.]

claw, hoof, Pangolin's claw (*cf* Tsamai)	go^{c}a-ko
claw	#xoti
claw, finger (*cf* Tsamai)	k'otako
nail, fingernail (*cf* Tsamai)	qúbakkó
fingernail	#šuXoma
clay	#kušta
clitoris (problem of analysis)	kótakálbano
close (door), shut (door)	$^{?}$ippa / ipa
shut the door!	$^{?}$ippa č'akuma / ipa čaquma
close (mouth)	(ki-) ka$^{?}$ilaki
close, shut (the eyes)	timása
clothes, cloth, loin cloth / clothes	labile / labila
clothing	#laalbe
cloud (*cf* Hamar)	pfolo / folo / #ɸoolu
cloud (*cf* older Tsamai or Dullay)	urate
cock's comb	diribe
coffee	&ári
cold (*cf* `warm' for problem)	s'antuni / tsantoni
cold / it freezes	s'anodi / s'antuni
collar bone	bargate
come, to	$^{?}$ee / e / &ée-ni
I go	#ka-$^{?}$ee
come out, go out, exit	$^{?}$abula
come! (Irregular imperative)	hááy / &háy / &háyta (pl)
container	&Hálo
conversation, talk	jámaki / jamaaki
cook, to (probably < {^{c}entisini)	#$^{?}$hêntisini
corpse (*cf* Tsamai, in form)	muga^{c}a-ko / mug^{c}ai-ko
cotton	fuudo / puddu / *fuddo
cotton (as crop)	zake
cough, to	$^{?}$ufai
cough, to (maybe same verb) (from Tsamai)	&gufá^{c}
count, to	#gad'a
cover, to	&šúda
cow	oota
my cow(s)	oota s-ine-wa
cow (*cf* Tsamai)	#luu
crack one's knuckles, to	gohiis / goyhis
crawl, to (*cf* spider)	xeq' / xeyd'
crawl, to (*cf* Tsamai)	zaaf-ini
crocodile	kimiša / kiimiša / #kiniša
cross (e.g., a river) / he is crossing	šap / ki šaba
river (probly = `we cross')	#Zo-šap < {jo-šap}
crow, to (of roosters) (*cf* `roar')	me$^{?}$i
cry, weep, mourn, to (*cf* Oromo booy-)	booni
you weep	#gida booni
cup (*cf* Tsamai)	#Haalu
cut, to / I cut	#gat / ka-gat
dance and sing, to	$^{?}$i$^{?}$a / $^{?}$ia
(2nd segment unknown)	#$^{?}$i$^{?}$a-xóota

dance and sing, to	šuwa
European music, *ferenji* music[4]	šuwád'i tááni
dark, darkness	girim / girum
completely dark	girum gadahune
(to) be evening	&gírib
dawn, to / the dawn	bâ'ri
deep (adjective) / deep, be (which?)	kušawi / ku šawi
dew (*cf* Kwegu)	č'arki
dew (*sono dubbio*, probaby a verb)	#ʔamaʔameeni
dewlap (of cattle)	maᶜalte
die, to / die!	tip, tiib / tíiba
she die	#ku-tip
dig, to	meeni
dig, to	gooši?a
dig, to (maybe = we dig)	#jodaŋgat
digging stick	makkatte
dirty (*cf* `bad')	#ʔaadala
do, to	&xáʔ / xaasá
dog (*cf* Hamar)	q'áske / ʔaski / #xaskâ
two dogs	qaske lama
dog-by bite-me	qaski-mi gaᶜ-ka
dog bit me	ʔaski gaᶜ-k
dog, African hunting dog; jackal	ʔóóše
donkey (*cf* Oromo)	harre / #harri
door (movable part) (*cf* Tsamai)	č'akuma / č'aquma
door / gate	#iipa / ʔiipa
down there (*cf* over there)	had'd'a ku-ʔida
down there (inadequate translation)	ᶜad'd'a zala
downward	ᶜad'd'a
downwards	naake
down (kind of vague)	#xurta
dress oneself, put on clothes	tuyi / tuyiʔ
drink, to (*cf* `water')	č'aᶜawa / č'aᶜaw
drum (*cf* Arbore for resemblance)	#k'alati
dry	b'aᶜatuni
dry (maybe is verb & = it dries)	#ku-buuî
dull (not sharp)	#gad'a
dust (*cf* Tsamai)	#têêriko
dysentery, have (*cf* Somotic)	s'ik'i / s'iqi
ear	ʔoowa / hoowa / uuwa
ear	#woowa
ear wax	xoodu
earth, ground (*cf* Oromo)	biyá / biya / #biiya
eat, to / eat! pl	č'âká / č'âk-tá
thou, eat! (possibly or unclear)	#ʔe-jak
cause to eat, feed / feed! pl	č'ak-šana / č'ak-šan-ta
egg (*cf* Gawwada dialects, not Tsamai)	ᶜugaxe / #ʔukahêê-da

[4] From Arabic *Ferenj*, ult. < *Frank* = 'European' [Ed.].

eight	ʔíista / ista
ejaculate, to; have male orgasm	hotki / qoʔtke
elbow, ankle	kanta
elbow, ankle (*cf* Tsamai & Arbore čilig)	s'îkile / #tsikîlâ
elder brother, ElBr (*cf* Tsamai)	šaʔal-ku
elder brother, elder sister, ElBr, ElSi	adda
elder sister, ElSi (*cf* Ari)	juka toyide / juka toyda
elephant	ʔukke / ukkʔe / ʔuke
elephant (*cf* Oromo arba)	arba
eleusine	b'aršak'e / peršaqe
embers (*cf* Tsamai)	borxa-ko
empty	#baatu
enter, to	g'iš / γiš / guš / giš
doorway, i.e., entryway	g'išša
enter, to	#woolaka
erection, get an (*cf* Dullay)	d'okoko
European, American, *Ferenj*[5]	iditi šuwa
exchange, to (plural subjects) (*cf* Tsamai)	&hokam
eye (human, elephant)	ʔáafa / aafa / #ʔaafa
eye brow (eye's hair)	#bini-áafa-ti
eye lash	ʔíife
eye lid	déémi
face (visage) / face, eyebrow	bâlᶜasa / balæsa
fall, drop, rain, to	wak / #wak
farm (noun) (*cf* `field')	#kaula
farmer (*cf* Amharic)	gabâr, gabr-
fart, break wind, to	zíiʔ / zi
fat (of meat), pot belly	moora / #mora
fat, thick, stout (he is)	ʔandire
father, Fa	baaye / #baai
father, Fa, FaYoBr	ʔabba
FaSi, paternal aunt	maama
fear, to (incomplete analysis)	šaʔate / šaʔati / šaʔ
fear-ing (incomplete analysis)	šaʔati-ba / šaʔa-tiba
cause fear, to	šaʔ-šani-yop / šašan-yop
feather, ostrich feather (*cf* Tsamai)	silite / #silite
feel, to (*cf* Tsamai)	tab'tab' ke-habi / tabtabi ke-habini
fence (*cf* Tsamai)	#okûnti
few (morphology not understood)	#ramunnauni
field	kawla / kaula
fight, struggle, to	čok
I find (probable morphology)	#ka-čo
hit, spear, sting, to / cause to hit	&coq / coq-san
fill, to / make pour (*cf* Tsamai [húč'č'i)	&učče / učč-as
find, to	goʔ
cause to find	goʔ-san
finger (*cf* Tsamai ota-ko = fingernail)	otako / qútakkó

[5] See note 4.

finish, to	rawi
fire	ʔóxona / ʔoxone / ohone / &oxóni
fish (cf Banna or Hamar)	kaara / #kaara / &kára
a big fish	kaara gadahuni
big fish (species)	q'alti
fishnet (*cf* hook) (*cf* Tsamai)	#korumi
five, 5 (*cf* Tsamai)	hobbe / hoppe / xubbe
flea, bedbug	filaye / fillaye
flash (of lightning)	k'owadi / qawade
flour	d'iila
flow, to	fad'-tam / faʔ-tam
cause to flow; pour, to	fad'a / faʔd'd'a
flower (*cf* Tsamai)	#bisku
flute (*cf* musical instrument, file)	tuule
flutter one's hands, to	kiskisi
fly, to; stand up, to	ʔaxay / axaya / &áxay
fly, to (semantically incomplete)	#ʔaxay-bâkurru
fly (insect) (generic term), beetle	bânnádo
fly (insect) (from Tsamai)	#ʔinnako
fog (*cf* Tsamai)	ʔurʔurratte / ʔururate
food (unusual d ~ n variation)	naᶜana / daᶜana
fool (morphologyʔ)	#dima-tsiiniʔi
foolish	zarako
foot, front foot of elephant (*cf* hand)	ʔiiʔâ / iyyâ
foot, leg	haka / #haka
rear foot of elephant	hááka
foot	#ʔičêdi
forearm, fore arm (from Tsamai `elbow')	#tsigili-ko
forehead	náára
forehead	#baliti
forest (Tsamai has [orro])	waara
bush	#waara
four, 4	talaxa / talaha / taraha
fox, bat-eared	fúga
frog	#mogaʔîti
fuck, to	šoq'eni / šoqeni / &sóxele
full	#niitsina
gallop, to (*cf* `run')	gey / gaʔi
garlic	tooma / tuma
Gawwada	ale
Gawwada, to Gawwada	gewad-ke
gazelles (generic term)	hóron-ku / xolâŋ-ku
genet, serval (*cf* leopard & mongoose)	mêrle
get down (from something), to	rex / rehi
giraffe	d'amᶜate
girl, unmarried young woman, daughter	juuka / juka
give, to	naʔa / &naʔ
give me! give to me!	naʔa naaku
give him! give to him	naʔa wanna

I give	#ka-nnaá
give, to	bi$^{?}$e
give us! give to us!	bi$^{?}$e juu-ku
gland	q'i$^{?}$ldi / qild'e
go, to / go! / go	roo / rootá / &róo
walk, to	#roota
go, to	$^{?}$áskam / asxam / #aaskam
go, to / let us go!	ootu / ottu
go out, exit, to	kaat
go out, exit, to (morphology$^{?}$)	kola / ko-la
goat	mááta
many goats	maata gedahuni
other goat, another goat	maata keesa
goat (2nd form is probly fem.) (Dullay)	dala / dali-te
goat (inferred form) (*cf* Tsamai)	orgai-ko
goat (*cf* Somotic)	#k'oolu / #g'oolu
god, God (*cf* Lowland East Cushitic)	waga / waq
God give to thee (for me)	waq-na jata
gold (from Amharic)	#wêrk'
good (homonym *c* tobacco)	tampo
good (for others, not self) / (general)	$^{?}$abba / #$^{?}$abba
good (for self)	wanna
gourd	k'umu / q'umo / #Xumu
with gourd	q'umo-$^{?}$u
by means of gourd he drank	k'umu-mi č'a^{c}awa
gourd (kind of)	$^{?}$urbo
grain, a (e.g., grain of sand)	$^{?}$anni
grandfather, GrFa	$^{?}$akka
grass (*cf* Tsamai)	#haaši
grass (a kind)	č'âlq'âmine
grasshopper, striped	tsi^{c}au
grave, tomb	hawle
green, wet, green tree (not dry)	č'ark'a-muni / # čêrka-mun
grind, to	zaxi / zahe
grind grain, to	zahe $^{?}$anni / zaxi $^{?}$anne
grow, to / cause to grow, to (*cf* Tsamai)	&g'óh / g'óh-is
guardian spirit (*cf* Oromo ayana)	$^{?}$ayante rehki
guitar (*cf* Tsamai but widespread)	zonq'e / zoonqi
gun, rifle	č'awo
my gun	č'awo s-ine
gush, flow, flood, to (meaning unsure)	dufi / d'ufi
flood	ča^{c}aw ki-dufi
hail (precipitation)	$^{?}$abzite (Tsamai azbite)
hair (of head, of arm), head, fur	b'ine / #b'ini / #bini
of hair, of head	b'ini-ti
shaved, he	b'ine ki-g'esi
he pulled out, plucked out hair	b'ine ki-futti
hair, body	faya
hair, body (*cf* Tsamai)	bááya

hair, pubic	bošê'tti
hair (*cf* Tsamai)	gazo
hair (of armpit, eye brow) (*cf* Tsamai)	rifaŋ-ko
Hamar, Banna / Banna / Hamar	orga / orgo / orgita
hand, shoulder, arm	iia / iya / i$^{?}$a / #$^{?}$ii$^{?}$ii$^{?}$a
hand (secondary form) (*cf* Tsamai)	harko
hand bleeds	i$^{?}$a ilkato
hand, palm of hand (*cf* Tsamai)	gan^{c}a
clapped hands, he	gan^{c}a ki-ho$^{?}$i / x$^{?}$oyi
hard (from Amharic)	#t'êŋkarra
harvest	#lak-haata, #lakhaata
he, subject & object Clitic	ki / &ki
to him, for him	wanna / waana / &wa-na
he, 3rd pers. sg. pronoun, masc., focal	kita / &kiita
he, 3rd pers. sg. masc. (dubious)	$^{?}$ind'ad'ate
his	s-eena / &s-éena
he, over there	$^{?}$ad'd'a
he (sceptical, mistranslation)	#roota
head rest, warrior's pillow or stool	kere
my head rest	kere s-iine
hear, to (hear/ditto/hear!)	$^{?}$aaš / $^{?}$aš / $^{?}$aaš-a
hear, listen, to	#aaša
heart	#lââta
heart (*cf* Tsamai)	zá^{c}-ko / za$^{?}$a-ko / zææ-ko
hearth, fireplace of 3 stones	kid'iša / kidiša / kidisa
heavy, be	$^{?}$addiši / $^{?}$adiši
hedgehog	tâ'ŋâtâ'ŋačo
heel (*cf* Tsamai)	tokon-ko
here	$^{?}$únkona / #wûûŋki
over there	hunkona had'd'a
to here, towards here	na$^{?}$anki
hiccough, hiccup, to	hak'ad'
hide, to	#čaHda
hippo (from Tsamai or lent to Tsamai)	rento
hips (*cf* Tsamai)	úŋgóro
hit, to	kape
beat! strike! / beat! pl	kappe / kappe-ta
hit each other! pl	kappe-ta íla
hit! / hit! / to hit / to hit	xo^{c}a / xoha / xo / xob'
hit, to (or) / she hit	#$^{?}$ii / #ku-$^{?}$ii
hoe (*cf* Tsamai)	#gaita
hold, to / (maybe) I hold	#Ha / #ka-Ha
hole, passage, nostril	fulle / falle
nostril, hole of nose	fulle sina-te
honey / bee, honey	šóókaya / šokaya
bee honey, honey	šokaya nê^{c}ê
honey	nê^{c}ê
honey bee (SLLE X = γ or q' ?) (*cf* Tsamai)	#tsoonaXu
honey	#šookaya

honey bee (*cf* Tsamai)	s'onk'o
honey bee stung me (*cf* Tsamai)	s'onk'o ga^{c}-ka
honey, ground, Amharic /t'azma/	dande
honey, wild (not found in honey barrels)	k'oya / qooya
honey comb	leefi / lefi
honey wax, wax of honey	$^{?}$uure
hook (*cf* Maji)	kormičo
horn (*cf* Tsamai)	gattakko / gatako
horn (*cf* Tsamai, but less likely)	#gasani
horse (*cf* Oromo)	fardo
hot (*cf* rays of sun)	šooni
it's hot	#ku-šooni
house	wúra / ura / hura / #$^{?}$uura
my house	ura s-ine
house is burnt, house-the it burn	hura-ko ko k'ow
how$^{?}$	#$^{?}$ašana
how many$^{?}$	mìyá
how much$^{?}$	ašana kuyda
hug, embrace, to	ka$^{?}$i / $^{?}$ka$^{?}$i
hug me!, embrace me!	šeme$^{?}$aani
hump (bovine's) (*cf* Tsamai)	dóólte
hundred (*cf* Oromo)	d'iib'a
hundred	#sên-čoma
hungry, be	gaši / #gaaši
hunt, to	$^{?}$adam
hyena	gurr$^{?}$e / gurre$^{?}$ / guri
hyrax, rock (*cf* Hamar)	šóóni
I, 1st pers. singular pronoun, focal	kaata / &kata
I, me, subject & object Clitic	ka / -k / &ka
for me, to me	naa-ku / na
my	s-ine / &s-íine
I am	kää$^{?}$ana
in (e.g., in the water) (Preposition)	gusko / gusku
inside	gusk-i-to
inside, inside of	uskutu
inside the brain	uskutu nóólu
insult / to curse (the same word)	s'ali
insult each other, to	s'alete ila
intestines, guts	mêr^{c}amête / #mêr$^{?}$êmata
iron (areal term)	sibila
itch, an (*cf* Omotic `scratch', `itch')	k'as'o
jaw (*cf* Tsamai)	gawgawe
jealousy (*cf* bad)	$^{?}$ádala
jump, to (*cf* Tsamai)	b'uli
jump over, to / jump, to / jump, dance, sing	g'uttal / #gutal / &gutal
kick, to	d'iti
kidney (*cf* Tsamai)	de^{c}esiti / dî^{c}sêtte
kill, to	šup
kill, to / ditto / kill! pl	ji$^{?}$ / ji / ji-ta
to kill	#jita

cause to kill! / cause to kill! pl	ji-šan-a / ji-šan-ta
he hunt	#ki-jii
kindle (a fire) (cf `burn')	g'úyy-o
kiss, to (*cf* Tsamai)	mayyi / mayi
knee	gibila / giliba / #gibila
knee cap	q'ubulo / qub$^{?}$ullo
back of knee	q'as'anto / q'as's'anto
kneel, to	gilip
knife	šeera / #šeera
sharp knife	šera č'are
with knife, by knife	šer-mi
machete, *panga*[6]	#maačure
know, to (problem with finding root)	s'ii$^{?}$ / s'ii$^{?}$i / s'ii$^{?}$i$^{?}$
I know (see glottalic switch)	#k'a-tsii-ni < {ka-ts'ii-ni
lake	basin-ko
lake (from Amharic, with Tsamai suffix)	#bahare-ko
lame	tonako
laugh, to	muxi / muhi / #muXêê-ta
leaf, grass (*cf* Tsamai)	hááše / xaaše
left (side) (*cf* East Cushitic)	#biha
left (hand, side) (*cf* Tsamai)	warkata
leg (*cf* Oromo miila)	mééla / meela
leopard	merila / mê'rî'la / #mîríla
lick, to / ditto / cause to lick	^{c}aadi / &^{c}ad / &^{c}ad-as
light (noun)	zooba
light (not heavy) (morphology$^{?}$)	#nagai-kota
lighten, to, flash, to (*cf* Tsamai)	b'ak'
lightning	#gawa$^{?}$a
limp, to (*cf* Tsamai, Dullay)	hokolini
lion	$^{?}$óóxaya / óóxaya / ooxaya
lion cub	$^{?}$óxay na$^{?}$a
lion's claw	$^{?}$óóxay-tâ soŋk'e
lion's mane	gofare
lip (*cf* mouth)	$^{?}$íífa / $^{?}$iifa / iifa
lower lip	záála
upper lip (*cf* `on, above')	ruugi
upper lip	#xiiti
lips (*cf* Tsamai)	xîb'b'e / γîb'b'e
liver (widespread form)	tíre
load, burden	$^{?}$aga / agaki
long, far	$^{?}$orma / urma / #uurma
it lengthened	kita orma / kito órma
louse	s'amis'a / t'amit'a / #čaamija
head lice	s'amis'a b'ini-ti
clothing lice	s'amis' ke labili-te
lung (not necessarily from Tsamai)	sompa
maize (*cf* Tsamai)	game / #gami

[6] *Panga* is the Swahili term for a broad-bladed machete or cutlass common in East Africa. [Ed.]

Male (neighboring people)	maale
male (humans and fowl, at least)	šoqta
male fowl, cock, rooster	šoqta baaša
male, masculine, vir	šoqota
man, person	ʔinta / hinta
man he good, good man	ʔinta ku-ʔabba
man's nipple, teat, breast	ʔint-ta ʔama
many (but *cf* big)	geduhuni / gadahin
many (*cf* `big' and `thick')	gaddahuni
market (from Amharic)	#gêbêya
marry, to (possibly = cause to enter)	#gaʔi-šan
marry, to	&ifam
mead, honey wine (*cf* Tsamai)	koron-ko
the mead is drunk	xoron-ku ʔa-č'aᶜawa
mean, to, talk about, to (*ça veut dire*)	ᶜaline
meat	č'ata / čata
meet, to (Lit. = they met)	kad'e-ʔela-ke
melt, to	raw / rab
milk	ʔeefe / &éefi
milk!	fíiya / fiiya / fiya
millet (Dullay and Male)	diškaro
millipede (*cf* scorpion)	hanago ʔarafkuti
mix (trans), to / mix (intrans), to	&lax / lax-am
mix, to	&ᶜangat
molar, molar tooth	ʔango
money (from Amharic)	#gênzêbo
mongoose (generic)	gord'isa
mongoose, broad-striped, genet	wálta
moon (widespread)	léᶜa / leᶜa / lea / #leᶜ
moon rose early, started to be seen	leᶜa ki-kadi / ki-kᶜad'i
moon rises, after sunset	leᶜa ki-dukanis
mosquito	q'ináno
mother, Mo	ʔaaya / ʔaaye / #ʔaai
MoElBr, MoYoBr, maternal uncle	ʔabiya
MoElSi, MoFa	ʔaabo
MoYoSi	ʔindo
mote, sand in eye, sand of eye	č'umaraq'e / č'umaraqi
mountain (*cf* Oromo)	#gaara
mountain (*cf* Tsamai)	kotun-ko
mountain, hill (*cf* Tsamai)	kaško
mouth (human, elephant), snout (baboon)	ʔíifa / ʔiifa / iifa
mouth, he opened	ʔiifa ki-b'ak'
mouth, he closed	ʔiifa ki-kaʔilaki
mouth of bird, beak	ʔíifa karbo-ti
mouth, small/narrow	ʔiif mod'uni
mud (*cf* Tsamai but from Ongota?)	#čok'e
mule (*cf* Oromo)	gange
music (meaning may be *`ferenj'* instead)	tááni
musical instrument (thin bamboo pipe)	file
name	miša / #miša

what is thy name[?]	miša s-idu haka
narrow	maage
navel (looks native!)	#šooma
navel, belly button	handurte
near	d'exo / deeho
neck (widespread form)	#luRoma
nest (*cf* `house'. 2nd segment not bird)	#wuura-ka[?]ubat
new (*cf* `good')	#[?]abba
new (*cf* Tsamai)	k'awtita / q'awtita
nibble, to	nagaska / nnagaska
night	#[c]uo
night ([?])	ekiti
night, blackest night	ekiti ku girim
nine, 9	gólanke / golanke
nose (SLLE agrees)	siina / şíína / šíína
now	háyki
numb, be	šik[?]mod' / šikumod'
old, thou art	[?]i gešwi / i gešwi
old, I am	ka gešwi
old man (*cf* to bury)	[?]adiba / adiba
old woman (Probably < Tsamai)	hadigde gečááte
on, above, up hill, up slope, over	ruuge / ruugge / rugge
up there	rugge-ki
one, 1	akala / ákalbano
one, 1	#atkalbano / #akkalbano
one who, one that	[?]oola
one who wants	[?]oola ki-xabiini
Ongota, Birale (person, people)	[c]óŋgotá / [?]óŋgotá
Ongota language, Birale language	[?]iif [c]óŋgotá
Ongota hamlet, village (name of)	muus'e
onions (1st form < Amharic)	šinkurt tuma
open (mouth), to	b'ak'
ostrich (*cf* Tsamai)	balgiddo / balguto
other, another	keesà / kesa / #keesà
other person, another man	[?]inta keesa
otter	dâbârša / dâßârša
ox (possibly means male cattle)	ra[c]asa / ra[?]asa / raesa
goat[?] Maybe billy goat[?]	raasa orgai-ko
palate	d'anga
pancreas / gall bladder / spleen	land'e / lande / land'e
pangolin	márstte
pass the night, to (metathesis[?])	tagahu[?]u / hutaga
peck at the ground, to	so[c]ad-ini / so[?]ad-ini
pencil (< Amharic)	irsasi
penis	móólu / moolu
people	yooba / #yooba
two people	yoobá lama
three people	yoobá zéha
four people-pl (or 4-people-are)	yooba talaha-wa
five people	yooba hobbe

pile, pile up, heap, to / heap it!	tagas'/ tagas'a
pimple	tiniša
placenta, afterbirth	ʔaage
plant, we (*cf* `sow')	jo-goši
play, to	&íški
we played	&ju-íški
pluck out, to ; pull out, to	futti
porcupine	giršu
porcupine quill	sííle / síle
possible, be (*cf* be able)	ʔalgas-am
pot, jar	kaba / #k'aba
pound!, hammer!, forge!	tunta
pour, to	#baHatin
puff adder (sp. snake)	buute
pull, to (*cf* Tsamai [doɣi])	doxa / doha
pull to here!	doha naʔanki / doxa naʔanki
pull, to (*cf* Tsamai)	#ziita
punch, to	tumat
purse	korogo / korojo
purse (< Amharic)	borsa
push, to	tuŋula / tungula
push, to (morphologyʔ)	#hegistake
put away, store, to / cause to store	&tiid / tiid-san
python (*cf* Tsamai)	baf-ko
quit, to / quit it!	hur / hura
rabbit, Grass hare	gubále / gubale
rabbit, Spring Hare, aardwolf	qalate / ʔalate
rain (noun)	haaje
rainbow	gurbbi
rainbow (*cf* Tsamai [ziila])	#zilaŋka
ram, sheep (*cf* [xuuna])	hóóna
rat (*cf* shrew, Rufous elephant)	#dibita
ratel, honey badger	gisu / gissu
reach, to (*cf* `arrive')	d'agap / dagab'
red	romini / rumine / #ruuminâ
rest, to, breathe, to (*cf* Tsamai)	naʔs-ad' / nas-ad'
rhinoceros (maybe < Tsamai)	oršaᶜte
right (hand, side) (*cf* Tsamai)	mizgitte / #mizgita
ring, iron ring on finger (*cf* Tsamai)	g'ob'b'e
rinse mouth out, swish H_2O in mouth, to	muč'muč'-ad'a
ripe, be / it ripe (unclear pronoun)	#kuhêên / #ku-hêên
rise (of sun), to	bezam / bezab
rise (of moon), show up after sunset	dukanis
river	golle / góóle
to, towards a river	golle-ke jaara
he crossed river, forded	golle-te ki-šap
river (cf `water')	&caᶜáw
road, path	kiti / #kiti
road is narrow	kiti maage
the car road is wide	kiti mooq'ad'e lab'a

path (lit. = foot-by go)	#ʔakami rotta
roar, to, bellow (*cf* `crow')	meᶜi
root, blood vessel (*cf* Tsamai)	Hîzê-te / #hezi-ta
rope (*cf* Tsamai)	#siibdi
rotten (*cf* `spoil')	#lugmat
it rotten	#ku-lugmat
round	mulk'o / mulq'o
run! gallop! / (*ditto* SLLE)	g'eya / #d'eiya / #d'eyya
cause to run! make 'er gallop!	gᶜey-sana
run, to (*cf* Tsamai `run away')	bag'ad'
saliva, drivel	b'aq'aq'e / baqaqe
saliva (*cf* Tsamai)	waaq'e / waqi / #waɣe
spit saliva	#waɣe tufat
saliva he produce / salivates	waaq'e ki-ʔelisi
saliva, make or produce saliva by moving tongue around in mouth	ʔelisi
salt (widespread term)	soo?ko / sooqo / #sooxo /
salt has been added	&soqo a-fáʔa
sand (*cf* Tsamai [šumaHto])	šumaxa / šumaha
much sand, many sands	šumaxa gadaxune
a grain of sand, sand tiny	šumaxa moʔone/muʔuni
sandal(s)	tahata / takata / #taɣata
say, to	ʔis / #gisa
scorpion	hanago / #hanago
scorpion (*cf* Tsamai)	gaytakko
scratch, to	haabi / &xáab
scratch at the ground, to	harransadi / harransad'i
scream, shout, cry out, to (*cf* Tsamai)	riri
see, to	yop / yob / #yoobi / &yóob
see, look at, to	noq'ot / nok'k'ot / &noqot
seed	bodoxo / bad'aho / #bora
send, to	luq'e / luqe
send, to	yaq / yak'
seven, 7	tæxænke / tâxxânke
seven, 7	#daHaŋki
sew, to / I sew	#garis / ka-garis
shade, shadow (homonym *c* spider)	tagara
shaman, *Qallicha*[7]	baaxa / baha
shame, it's a	šomani
sharp (maybe native)	#šida
sharp (*cf* Tsamai)	č'are
make sharp (*cf* Tsamai)	č'arayise
shave, to	g'esi
she, 3rd pers. sg. pronoun, feminine, focal	kuuta / &kuuta
she, her, subject & object prefix or Clitic	ko / &ku
her, hers	s-uʔwa / s-uwo / &s-úuʔu
to her, for her	waa-ta / &wa-ta

[7] *Qallicha* is an Amharic word denoting a pagan shaman or high ritual figure.

sheep	xuuna
shit, feces / defecate, to	báxa / baxi
shiver (from fear), to	{naH} / nax / na^{c}h
I fear	#ka-nnaH
shiver (from cold), to	bari
shoot an arrow, to	haat / xaat
he shot an arrow	feld'i ki-xaat
short (*cf* Tsamai [maŋa])	#maŋgatinâ
shoulder (*cf* Tsamai)	katye / #kači-ta
shrew, Giant elephant	bálo
shrew, Rufous elephant; Cape rat	dißita
sick, be / be sick / sickness	roos / ros / roose
be sick < he sick	#gi-roosi , {ki-roosi}
sing, to	d'iiti
sing, to (from {dance-I-sing}$^{?}$)	#šua-xo-$^{?}$aa
sip, to / suck, to	s'oob'i / s'uub'i , s'o$^{?}$bi
sit, to (sit/sit!/sit!-pl)	$^{?}$aam / $^{?}$aam-e / aame-ta
sit! rest! (pl) / sit, rest, to	#$^{?}$aami-ta / #$^{?}$aame
six, 6	tsanafa / #tsanafa
skin, hide, leather, cow-hide	d'árbo / #darbu / &darbo
sky (*cf* some Ometo)	munto / muntu / #muntu
sleep, lie down, to	k'aade / qade / k'ad'd'
lie down, to	#kâ-xaadi
sleep, to, pass the night, to	#tagam
let me sleep!	ka-tagam
let us sleep!	č'a-tagam < *ja-tagam?
small, very small	mo^{cc}onne / mod'oni /
small / narrow (SLLE)	monnoeni / mûnnu$^{?}$êni
narrow	#mûnnu$^{?}$êni
smear (esp. butter), to	&šúguc-o
smell, to (but *cf* `snot')	#$^{?}$aarmata
smell (something), to	sins-ad'i / sinsadi
smile, to	kasod / γasod / γasod'
smoke	arto / #$^{?}$arto
smoke, I make (*cf* Tsamai)	^{c}a^{c}ara / $^{?}$a$^{?}$ara
smooth (*cf* Tsamai)	#xampa
soft	#xampatin
snake (generic), cobra	gábare
snap fingers, to	hatini / xatini
sneeze, to (verb parts may be united)	siina ka xo / ka-k'o
sneeze, to	#$^{?}$iîgâši / &^{c}íkkisi
sniff, to (*cf* below `snuff')	&súg
snore, to	horisi / xorisi
snot, nasal mucus	armata
cough, to (*sono dubbio*, see ↗)	#$^{?}$armata
snout, of baboon	$^{?}$iifa
snuff tobacco	hindawi / kindawi
I sniffed tobacco (= snuff)	&tampo ka-súg
solifugid, large hairy spider	sâsâbi / sâssâbe / sabsabe
sorghum	musko

grain (crop) (generic term)	músko
sorghum (*cf* Tsamai)	ᶜu?a
sow, to (*cf* Oromo [gosa])	goši?a
sp. antelope, Bates dwarf antelope	gáábo / gááboti
sp. antelope, Bohor, gerenuk (*cf* Tsamai)	moíle / moile
sp. antelope, bushbuck	mêrja / mîrja
sp. antelope, Hartebeest, Topi	árka
sp. antelope, Kob, Lechwe (beautiful)	láále / laale
sp. antelope, Kudu / eland	gontori / gontre
sp. antelope, oryx, eland	šalta
sp. antelope, waterbuck, Defassa	do?osa
sp. bean, Amharic /adoŋgware/	fes'e
sp. bird, Abyssinian Ground Hornbill	diige
sp. bird, crow	?uurrbi / qurrubi
sp. bird, guinea fowl	kulule / kululi
sp. bird, hawk	kilili / kilile
hawk flies	kilili ?axaya
sp. bird, partridge	korkiša
sp. bird, vulture	kokako
sp. gazelle, dikdik (*cf* Tsamai)	sairé
sp. gazelle, ibex, Abyssinian ibex	wáhára
sp. insect, `railroad train bug'	šiddo
sp. insect, tick	kinne / kiine
sp. lizard	maaq'a
sp. lizard, unspecified	gúrbi
sp. lizard (*cf* Tsamai)	ganato
sp. monkey, (probably baboon)	dabaša
sp. monkey, Colobus or gureza	karááwa / karawa
sp. monkey, guenon, Patas (*cf* Tsamai +)	k'áára / káára
sp. monkey, `Lemurs' of Madagascar	karawago
sp. rodent, small, eats corn stalks	zááni
sp. tree, acacia	angaba
sp. tree, fig, sycamore, Amharic /warka/	šaphša / šab'ša
sp. tree, juniper (*cf* Tsamai or Oromo)	birbir-ko
sp. tree, palm	?ugaᶜa
sp. tree (local variety)	boytako
sp. tree, Amharic /girawa/.	fač'ato / p'ač'ato
sp. tree, Amharic /weyra/	egerko
speak, to / cause to speak	&morom / morom-san
spear	tora / #toora
with spear, by spear	tora-mi
spend the day, to (Amharic /wal/)	waasa
sperm (*cf* seed)	daᶜasino / d'a?sino
spider (homonym *c* shade)	tagara
spider she crawl	tagara ko-xeq'/ ko-xeyd'
spider	#garrabati
spit, to	túfa
spit, to	#buuda / &búd'
spoiled, be, get spoiled	?awsa-tam
spoil, to (transitive) (*cf* Tsamai logi)	loguman / logmad'

spring (of water)	č'appate
squeeze, make a fist, to / squeeze!	s'iib / s'iibba
squeeze out, to	birč'as / pirč'as
squirrel, tree	gurt'ulu
squirrel, ground (not chipmunk)	gâ'ro
stalk, cane (*cf* Tsamai)	xawša
stammer, stutter, to	ga$^{?}$ga$^{?}$i
stand, stand up, get up, to / get up! / stop	yaw / yawa / &yawa
stand, to (*cf* `fly, to')	#$^{?}$axaya
star	wal^{c}ana / wol^{c}ana / walana
star (*sono dubbio*, unless < Dime)	buusa
star (secondary form) (*cf* Tsamai)	Hizge / hezge
steal, to (*cf* Tsamai & Arbore)	#gere$^{?}$a
stick (noun)	fooru
stick-by I struck	fooru-me ka-xo
stick out, put out (of tongue)	bun / bul
sting, bite in, to	ra^{c}e
stink, to	l$^{?}$aari
stink ant (*cf* Tsamai)	zuba^{c}e
stomach rumbles (inadequate analysis)	oola kori$^{?}$inikato
stone	c'a^{c}a / # čaHa
stool, head rest	kire
strangle, to (*cf* Tsamai, also choke)	niik
stretch one's body, to (*cf* Tsamai)	ma$^{?}$sad'
striped, spotted (*cf* Dullay)	zerge
stroke (something), to (*cf* Tsamai)	$^{?}$ooši
sweep, to (lit. = earth-he-stroke)	#biya-ko-$^{?}$ooša
suck (at a breast)	$^{?}$aamini / $^{?}$amni
sun	$^{?}$ak'ač'u / ak'ač'o / hak'ač'o / xáč'o / #$^{?}$axačo / &axačo
rays (of sun) / sun rays	šóóni / xač'o šóóni
sun rises	$^{?}$ak'ač'u ki-bezam (~ bezab)
swallow, to	na^{c}a
eat food!	na^{c}an č'aka
food is eaten	na^{c}ana ki-č'ak-tam
sweat, to (*cf* Tsamai)	siipi / sippi / #siipu
swim, to (*cf* `cross')	#šap / jo-šap (`we swim')
swim, to (*cf* Tsamai)	zogiya
swoop down like a bird, to	xaap / xaab
tail, tail of elephant	la$^{?}$aka / laaka / laka
tail (from Hamar)	dubano
take, to	#ta$^{?}$aa
taro (*Colocasia esculenta*)	luuq'e / luqe
taste, to (from Amharic)	k'amas' / qamas'
taste good, be sweet, to	č'a$^{?}$ami / č'a$^{?}$ame / č'aame
tear (H_2O) (*cf* Tsamai)	#$^{?}$ilmame
tell, to	$^{?}$alle

tell me!	ʔalle naaku / naaku ʔalle
ten, 10	čomà
eleven, 11	čoma akala
twelve, 12	čoma lama
termite (*cf* Arbore [limmê])	rimarimo
termite (*cf* Tsamai [ʔilmate])	#ʔirmati
termite mound, termite hill (*cf* Tsamai)	#kuyyu
testicles, buttocks (*cf* Tsamai)	kirde
that	ʔad'ate
that person is good	ʔind'ad'ate ʔabba
that tree	hanč'a ko-ad'ate
that	#ʔatakwida
they, 3rd pers. plural pronoun, focal	kiʔi-ta / &kiʔi-ta
they, subject & object Clitic	kiʔi / &kiʔi, &kiʔa
their, theirs	s-owaya / &s-uáya
they (probly = their)	#sooya
to them, for them	woya-ko / &waya-ku
thick (*cf* `big' & `many')	#gaddahîni
thigh (*cf* Tsamai [gubis-ki])	gíbiza
thigh	#taffiti
thin	xark'o / harqa
thin (equals small-long, I think)	#munaʔen-orma
thing (not the same as `one who')	ʔola
a thing, one thing	ʔola ʔakalbanno
thirsty, be (*cf* Dullay)	d'eb-ad'
this	ʔinda / hinda
this woman	ʔinda ʔayma
this mouth	inda ʔiifa
this man, this male	ʔinda šoqota
this tree	hanč'a hinda
this	#ʔokóona
thorn	#tabata
thorn (*cf* Tsamai)	gorli
thou	jááme / #janta / &janta
thou, object prefix or Clitic	&jami
thou, subject prefix or Clitic	jaa / jan-ta
to thee	jaa-ta / &ja-ta
thou, subject prefix or Clitic	ʔi / &i-
thou art good man	jááme inta ʔabba
I mean thee; talking about you	jáme ka ᶜaline
thy, thine	s-iido / s-idu / &s-íidu
thou (somewhat doubtful)	naʔá / &ne
thread (unchecked phonetically)	ᶜoylHe
thread (*cf* Tsamai)	#zaaGe
three, 3 (*cf* Tsamai)	zéha / zeha / zexa
throat, Adam's Apple	gomáro
throw, to	#ʔacooRa
thumb (*cf* Tsamai [oâ-ku])	wûᶜa-ko
thunder (*cf* Tsamai)	gawaᶜa-ko / gewwaʔ-ko
thunder (*cf* `lightning')	#baRi

tie, to	#gaačik'
tie, to	&Hed
tire, to	gafad'
tire, to (*cf* Tsamai *re* final ab')	k'ard'ap / qard'ab'
tobacco, cigarette / tobacco	tampo / dampu / #tampo
tobacco pipe, Arab style `hookah'	ʔorabo
today	hunne / hunni / hune
today it rains, it falls	huni ke-wak
together	ʔilele / &illa
tomorrow	baram / &baráma
tongue	ᶜadabo / ᶜadaba / #ʔadabo
tongue, he sticks out	ʔadabo ki-bun / ʔadabo ki-bul
tooth, teeth, tusk of elephant	ʔitima / itima / #ʔitima
tooth, dog-of	ʔitima q'aski-ti
tooth, it's a dog's	ke q'aski-ti ʔitima
touch, to	berri
trap, to, catch in a trap (*cf* `hug')	kaʔ / kaʔa
trap it!	qaᶜasa / kaᶜasan
trap (a) (*cf* areal `iron')	sibila
I trap with a trap of iron	sibli-mi ka-kaᶜasan
tree, wood, dry wood (dominant form)	hanč'a / #hanša
tree (inferred from bark of tree)	goiti / goite
trunk (of elephant)	ʔúmbîtí
try!	ʔekeši ʔayo
Tsamai, Tsamakko	č'amako
turns around, it	maginšap
twenty, 20	#sên-lama
two, 2 (*cf* Hamar)	lama
two eyes	ʔaafa lamo
under (Preposition)	zal-to
under, below. Locative grammeme	zala
up (adverb of location)	#taʔta
upper arms, shoulders, self (*re* hugging)	zagari
he embraced himself	zagari ki-kaʔi / ki-ʔkaʔi
urine / to piss / urinate	šaaha / šax / šač
uvula (not in our Tsamai data)	leᶜe leᶜo
vagina / menstruation	kano, kaanu / kanu
vein, blood vessel (*cf* Tsamai)	hezi-te
velum, uvula	aygalauti
venom (snake), poison	tonte
Venus (the planet), star-the woman	hizki-te ʔayma
vomit, to / I vomit	ʔebeʔe-ni / #ka-ibeʔe
waist	bilide
want, seek, search, to	xab-ini / #Haabe / &Háab-
war	#toraéeni
warm (*cf* `cold' for problem)	s'antuni / s'antune
warthog	gaʔšo
wash self, to	hoob
I bathe (wash self)	#ga-xobi
wash, to / wash self, to	&hob-at / hob-at-iʔ

water	č'aᶜawa / č'aˀawa / č'aw
water	# čaahawa / &čaᶜaw
flood, water gushes	č'aᶜawa ki-dufi
water dripped, fell	č'aᶜawa ki-wak
a drop of water, water tiny drips	č'aᶜawa mod'd'une ki-wak
warmed (the) water, he	č'aᶜawa s'antuni
in the water	č'aᶜawa gusko
we, 1st pers. plural, focal	#jota-bati / &juuta
we, us, subject & object Clitic	joo / Zoo / &ju
to us	&ju-ku
our	&sí-jju
we good, we are good	jóóte ˀabba
we all, all of us	jootâ b'ad'e / joo b'ad'e
wear (coat, toga) (*cf* Tsamai)	šud'-am / šud'an / &šud-am
wedding (as a noun) / (as a verb)	#kičaki / #ki-čaki
well (water) (*cf* Tsamai [ˀeelgo])	#looRe
wet (*cf* `green')	#jêrka-muni
wet (*cf* Tsamai)	xu-č'abi / ku-č'ab'i
wheat (many connections)	gabzo
what?	&na
what? / what? why?	neeni / #nêêni
what did thou drink with?	neeni-mi č'aᶜaw
what is it? (inadequate translation)	ˀe nene
what?	niike
when?	barí / bari-ki / #bare
when did they go?	bare ki-ˀáskam
where? / from where? / whence?	hawuto / haawto / #haawa
where to?	gara ˀaytake / gara waytake
which?	háytà
which woman?	hayta ˀayma-ko/-ka
whistle, to	fidis / fid'isi
a whistle	#fidisá
white	ˀat-muni / atto-moni / #ˀattu-mune
who? / what?	haakà / haka
whose? / who?	saaye / #sai
wide (*cf* Hamar)	lab'a
wide (maybe mishearing of above)	#ˀabba
wind (air)	hábura / #hábura
wing (*cf* Tsamai)	#koola
wink, to (he winked = eye one)	ˀaafa kalbano
wipe, sweep (he wiped, swept)	ˀaˀoša bag'aresa
witchcraft, black magic (*cf* Amharic mwart)	marša
wizard, be a (Note: verb is causative)	zuˀu-sani / zuˀ-sani
woman	ˀáyma / ˀayma / aima
woman, wife	#ˀaima
woman's breast	ˀayma-tâ ˀaama
woman came	ˀayma ko-ˀee

woman cried, wept	ʔayma booni
woman dog, bitch	ʔayma k'aski
woman, that (translationʔ)	ʔayma ko ad'ate
woman, this (closer)	ʔayma-nke hinda
woman, thou	ʔáymanke
womb, house of birth	huura d'alti-te
worm, inch, reddish caterpillar, 22 feet	zâbork'o / zoborqo
worm (*cf* Tsamai)	#zibirqo
wrist	kirinče
yawn, to	šamaʔaš-ad' / šamm ʔašed'
yawn, to (*cf* Tsamai [šammaZ])	#šammaʔašêt
yellow, grey (different informants)	arate / #arate
yellow (may be native word)	#damáʔtâ
yes	#aa
yesterday	naxane / #naxanni / &naxáni
yogurt (Amharic îrgo)	moxoʔayi / mohoʔayi
young man (*cf* Oromo, Amharic)	goronsa
YoBr (*cf* Tsamai)	ʔaza / ᶜaza / azo / #ʔaaza
YoSi (*cf* Tsamai)	ʔaze / ᶜaze / aze
YoSi (*cf* Tsamai)	#ʔaze-sinne
you, ye, 2nd pers.pl	gida / #gidaata / &gíta-ta
to you, for you	gida-ko / &gida-ku
you (pl) are good	gidáta ʔabba
your (pl), yours	si-gida / &si-gída
you (pl) (direct object)	si-gida-wa
zebra / pl (*cf* Tsamai for sg/pl)	darokl-i / daraokl-ad'e
zebra (*cf* Male)	kirmaile / kê'rmaile

Problem Words

again (translation accurateʔ)	inda kolatu
chief (noun) (morphology)	#jotidibiatu
cold (both probly errors)	#a, causántuni /
	#b, tsaana = cold weather
dawn	makuʔidasi / ma kuid'as
down, there (or something like that)	zala (cf `down there')
God, god (loan translation < Amharicʔ)	#ʔârajijaami
heavy (morphology very unclear)	#ʔintêganza-buuti
hunter (internal morphologyʔ)	#bintêga-jii
many fathers (data conflict)	baaye nisina / bayeni s'ina
night (ʔ)	ekiti
scratch, to (*sono dubbio*)	#haamânâkero
straight (morphologyʔ)	#haiki-roota
teach, to (morphologyʔ)	#bortegana
think, to (morphologyʔ)	#kassagaŋgako
unknown element in `twill rain today'	go [go hunni ke-wak]
weed (no clue to its structure)	#haašaguju daŋgat
whose (morphology unclear)	#ʔintago-sai
woman, that (translationʔ)	ʔayma ko ad'ate

More Possible Cognations

bladder (but *cf* Tsamai `puff')	fugo
catch, to (a Nostratic phylum cognate)[8]	qáfi
rise early, early stage of rising (moon)	kadi / k^{c}ad'i (Amharic qdd)
the sun rises	&axaco ki-kata
shiver from cold	bari (*re* Semitic b-r-d)
shiver from fear	naH (Somaloid)
sorghum	musko (Oromo, et al.)
termite (*cf* Arbore [limmê] of SLLE)	rimarimo
(Hayward's Arbore [ririîb'])	
termite (*cf* Tsamai [$^{?}$ilmate])	#$^{?}$irmati
tomorrow	baram (Oromo bóru)
dawn	bâ'ri

[8] See note 3.

The Origin of the Tasmanian Languages

Timothy Usher
Santa Fe Institute

This paper results from an ongoing project aimed at classifying all the Indo-Pacific (Greenberg 1971) languages of Indonesia and the Australias by descent. The Tasmanian languages are now extinct, due primarily to a shameless campaign of genocide conducted by Australian settlers in the first half of the nineteenth century. This paper follows anthropological tradition by discussing them and other extinct languages in the ethnographic present.

Methodology

A spreadsheet-style database was created including several hundreds of words, when available, of all the non-Austronesian languages of New Guinea, Indonesia and the Pacific islands and some Australian languages. Dozens of Austronesian languages spoken in and around these areas were used as a control group, and to identify and factor out loanwords from Austronesian into Indo-Pacific. A similar database created by Paul Whitehouse contains wordlists from around the world, most pertinently nearly every language of Australia and many New Guinean languages. This database played a major role in the later parts of this study.

Etymologies were identified across this vast array of languages. Their distributions and qualitative agreements were then analyzed into factors that are held to represent either vertical retentions by taxa (classes of descent) or horizontal patterns of borrowing.

In general, grammatical features were analyzed as lexemes, rather than as typological features. Despite numerous sources and wordlists, very little is known about Tasmanian grammar, so the placement of Tasmanian by necessity relies primarily on lexical agreement.

Both the distributions across and qualitative agreements within these etymologies clearly show Tasmanian to be a member of the Pacific branch of Indo-Pacific. Each of a handful of salient counterexamples is explicable by relatively recent borrowing from the Kulinic languages of Victoria, directly across the Bass Straits from Tasmania.

Classification

The New Guinean branch comprises all of Greenberg's New Guinea mainland groups as well as his Pacific group. Within New Guinean, Pacific and Madang-Adelbert together constitute the Madang-Pacific group.

The Tasmanian languages share a common origin with the Pacific branch of Indo-Pacific. The membership of Pacific is as delineated by Greenberg (1971: 815-819), but with the addition of Yele as per Würm's (1975a) East Papuan Phylum, which in most respects is identical to Greenberg's Pacific, and Tasmanian.

The Solomonic languages, including Pele-ata (Wasi) on New Britain and all of the non-Austronesian languages of the Solomons and beyond, comprise a distinct group within Pacific. Tasmanian is a member of this group:

I. Pele-ata
II. Bougaineville
    W.Bougaineville
    E.Bougaineville
III. Central Melanesian
    Central Solomons
        Baniata-Bilua
        Lavukaleve-Savosavo
    Rossel-Santa Cruz
        Yele (Rossel Island)
        Reef-Santa Cruz
IV. Tasmanian

The languages of New Britain and New Ireland, with the exception of Pele-ata, stand beside Solomonic as coordinate members of the Pacific group. This arrangement differs from Greenberg's only in the inclusion of Tasmanian and Yele, and in the creation of the Rossel-Santa Cruz subgroup of Central Melanesian. Further sub-grouping is desirable, but has not yet been definitively resolved.[1]

Maritime Migration

This internal sub-grouping of Pacific, along with Pacific's special relationship to Madang-Adelbert within New Guinean, suggests a maritime exodus from New Guinea beginning in the Bismarcks and proceeding as far as Tasmania to the south and Santa-Cruz to the southeast (and possibly beyond).

It has generally been assumed that the Tasmanians arrived on foot from mainland Australia at a time when ice-age sea levels left Tasmanian connected to the continent. But because the speakers of every other known Solomonic language reached their current locations in boats, it is reasonable to allow that the speakers of the ancestor of the contemporary Tasmanian languages might have arrived by sea.

The feasibility of this scenario is proven by the early date of human settlement in the Solomon Islands (28,000+ b.p.; Spriggs 1992: 418), which necessitated watercraft seaworthy enough to cross several hundred miles of open ocean. While Tasmania is much further, most of this voyage could be made along the Australian coast, perhaps resulting in one or more intermediate settlements that were subsequently eliminated, abandoned, or absorbed into local populations.

In this light, the identification of several pockets of "Tasmanoid" or Barrinean physical types along the East Coast of Australia (Birdsell 1967) need not in itself imply the temporal priority of Tasmanians on the Australian continent.

---

[1] The extinct Kazukuru dialects of New Georgia, known only through the scantiest documentation found in Lanyon-Orgill (1953), do not really belong with Indo-Pacific, despite the claims of Lanyon-Orgill, Capell (1969) and Würm (1975, 1982). For instance, Kazukuru pronouns show an unmistakable parallelism with Roviana, the main (Austronesian) language on the island (Rov. *arau*, Kaz. *rau-no* 1sg., Rov. *agoi*, Kaz. *goi-no* 2sg., Rov. *asa*, Kaz. *sa-na* 3 sg., Rov. *ghita*, Kaz. *nggito* 1pl.incl., Rov. *ghami*, Kaz. *gimo* 1pl.excl., Rov. *ghamu*, Kaz. *gumo* 2pl., Rov. *arini*, Kaz. *riniai* 3pl.) However, there are several items on the Kazukuru wordlists which belong to Central Melanesian etymologies, demonstrating that the Kazukuru people once spoke a Pacific language, prior to the time of documentation.

Previous Publications on Tasmanian Languages

The first published work to seriously examine the Tasmanian tongues was E.M. Curr's voluminous *The Australian Race* (1887), which, despite its title, concerns itself primarily with aboriginal languages as they were attested shortly after the time of conquest. Appendix One (pp. 593-675) is devoted to the presentation and comparison of primary-source vocabularies and a brief discussion of Tasmanian's relationship to Australian in which Curr concludes that "both are descended independently from Negro languages" (p. 603).

H.Ling Roth's *The Aborigines of Tasmania* (1890) discusses the Tasmanian people and their culture. Chapter twelve (pp. 178-190) deals with several aspects of the languages, and while too brief to provide an adequate basis for further linguistic analysis, is nevertheless a careful and sober-minded commentary of value to the linguist.

Alfredo Trombetti (1923), an early proponent of global linguistic monogenesis, and his student Ricardo Gatti (1906-9), discussed Tasmanian within the context of Trombetti's broader global classification. Both Trombetti and Gatti believed Tasmanian to be a member of a vast family including the languages of New Guinea and Australia along with Andamanese, and proposed many hundreds of etymologies, of widely varying credibility, to support this contention. However, very little data from Indo-Pacific New Guinea was available to them, and their "Papuan" data is mostly Austronesian.

Wilhelm Schmidt, in *Die tasmanischen Sprachen* (1952), having compiled all the primary materials he could find with great care and attention to detail, delineated and reconstructed five Tasmanian languages along with proto-Tasmanian. The primary source attestations underlying these determinations are indexed in the latter portion of the book.

Arthur Capell (1956) excluded Tasmanian from his Common Australian, and evaluated resemblances between Tasmanian and Victorian languages, which are discussed later in this paper. "What do we know of Tasmanian language?" (1968) offers a short analysis of Tasmanian phonology and grammar, including several interesting text examples.

Joseph Greenberg (1971) in his landmark "The Indo-Pacific Hypothesis" concluded that Tasmanian belonged with the non-Austronesian languages of New Guinea, Indonesia and the Pacific Islands in an Indo-Pacific family. Drawing solely from Schmidt's reconstructions, he provisionally established Tasmanian as an independent branch of Indo-Pacific. His classification was based on material gathered in his Indo-Pacific Notebooks (n.d.), which was transcribed with great accuracy from the majority of published sources available at the time.

Stephan Würm (1972) compared Tasmanian with the rest of Australian, and concurred with Capell that Tasmanian did not belong in the Australian taxon, to which all other languages spoken on the continent belong. Following Capell, he also discussed resemblances between Tasmanian and the Kulinic languages of Victoria, which he attributed to borrowing.

Later (1975b), Würm evaluated Greenberg's placement of Tasmanian with Indo-Pacific, and while maintaining that Greenberg's evidence was insufficient, noted that "any similarities present tend to be more with languages now recognized as belonging to the East Papuan Phylum [i.e. Pacific]..." (p. 927).

N.J.B. Plomley (1976) presented lexical material in Tasmanian from all extant primary sources in their original orthographies and glosses. A loose organization of related items is offered, but in a far less processed form than that of Schmidt, and without reconstructions. He included extensive material from the diaries of George Augustus Robinson, which were not available to Schmidt at the time of publication.

R.M.W. Dixon (1980) saw the languages of Tasmania as unrelated to those of Australian or any other family, insisting that, "The genetic affiliation of Tasmanian is, and must remain, unproven" (p. 233).

The author extends his apologies to any whose valuable contributions were not mentioned in this section or that following.

Language Names, Locations and Sources

The distinction between languages and dialects in Tasmania might be debated. Certainly there were at least three, these being the Western, Northern and Eastern. For our purposes here, we shall follow Schmidt (1952) in recognizing five Tasmanian languages, with the Eastern group divided into its Northeast, Mideast and Southeast portions.

Besides Tasmanian, the following languages and language groups, listed here by area, are frequently cited in this text, with material drawn from the following sources:

Madang-Adelbert
: Madang-Adelbert languages of Madang province and the Adelbert mountain range in Northeast Papua New Guinea. Z'graggen (1970, 1971, 1975,1980a, b, c, d).

New Britain
: Qaqet (Baining), Taulil, Butam, Anem, Kol, Pele-ata (Wasi); Allen & Hurd (1963), Chowning (1996), Laufer (1950, 1959), Müller (1915-16), Parker (1974), Rascher (1904), Thurston (1982, 1992)

New Ireland
: Kuot (Panaras); Beaumont (1972), Capell (1967), Chung & Chung (1996), Lithgow & Claasen (1968)

Bougainville
: Rotokas, Rapoisi (Konua), Nasioi, Buin, Siwai (Siwai, Baitsi), Nagovisi, Koromira (Koromira, Koianu); Griffin (1970), Hurd & Hurd (1966, 1970), Laycock (1969), Rausch (1912), Wheeler (1910-11).

Central Solomons
: Central Solomon and Kazukuru families; New Georgia; Capell (1969), Lanyon-Orgill (1953), Ray (1928) Todd (1973, 1975)

Santa Cruz and Reef islands
: Ayiwo (Aiwö), Nanggu, Santa Cruz (Nea, Banua, Nambakaengö); Würm (1969, 1972, 1975, 1981, 1992a, 1992b)

Rossel Island
: Yele (Yeletnye) and dialects thereof; Henderson & Henderson (1974), Henderson (1975), Ray (1938)

Victoria
: Kulinic family; Blake & Reid (1998), Blake, Clark & Krishna-Pillay (1998), Blake, Clark & Reid (1998), Hercus (1986)

Finally, material from Greenberg's Indo Pacific Notebooks (n.d.) was available for most of these languages, although considerably overlapping the sources listed above. Words from languages not listed above were taken from the Usher or Whitehouse databases, the sources of which are available on request.

Orthography

A practical orthography has been adopted here for Australian languages in the tradition of the literature. No Australian language appearing in this paper distinguishes voiceless from voiced stops; here they are all shown as voiceless, with *th*, *ty* and *rt* indicating the dental, palatal and retroflexed stops respectively. Similarly, *nh*, *ny*, *rn* and *ng* indicate dental, palatal, retroflexed and velar nasals. In many cases, dental and palatal articulations are not phonemically contrastive, but here we avoid these determinations in following the source.

The single *r* in Australian generally refers to the retroflex glide or flap in contrast to *rr* which is an alveolar tap or trill. Outside Australia, including Tasmania, a single *r* is used to mean any rhotic, none of which are contrastive.

Capital *R* and *T* in provisional reconstructions are used to indicate rhotics and lingual stops of indeterminate quality.

Schmidt's (1952: 106, 110-113) "arabischen Laut", supposedly a voiced laryngeal fricative, but just as likely a velar (Capell 1968: 2), is written here as *gh*.

All unmarked vowels have Latin values. *ë* and *ï* are mid- and high-central vowels respectively. Schmidt's use of *ö* for what was probably a schwa is preserved, as is Würm's *ö* in the Reef-Santa Cruz dialects.

Hyphens within cited words indicate morpheme boundaries, although not necessarily separability. Material that is definitely optional is parenthesized. Forward slashes indicate paradigmatic alternations.

Abbreviations of Taxa

Mad	=	Madang
Rai	=	Rai Coast
Mab	=	Mabuso
Ade	=	Adelbert
J-W	=	Josephstaal-Wanang
PIM	=	Pihom-Isumrud-Mugil
NBr	=	New Britain and New Ireland (sub-grouping unclear)
Was	=	Pele-ata (Wasi) language
Bou	=	Bougaineville
CMe	=	Central Melanesia
CSo	=	Central Solomons
RSC	=	Reef-Santa Cruz
Ros	=	Rossel Island (Yele)
Tas	=	Tasmanian
Kul	=	Kulinic

Citation of Tasmanian forms

Schmidt's divisions of Tasmanian are abbreviated W., N., NE., ME., and SE. below. Some lists cited in Plomley (1976) have not yet been reconciled with Schmidt's dialects; words drawn from these lists are accompanied by the name of list as it appeared.

Although Schmidt's forms are technically reconstructions, and hence appear in his book with asterisks, they are not proto-forms in the classic sense and are thus shown here without any special marker.

Most of the spelling variations in Tasmanian words from the same dialect reflect the diversity of the primary sources. In his drive to regularize Tasmanian spellings, Schmidt also eliminated some valuable information and introduced some elements, such as a supposedly laryngeal fricative, of questionable fidelity. Here our goal is only view primary attestations as they appeared. Transparent orthographic variations have been regularized, for instance 'ee' from English-speaking informants is represented as *i*, 'gn' from French informants as *ny*, etc. but no further second-guessing of attestations has been attempted, even though some doubtlessly contain minor errors in interpretation.

It is unclear to what, if any, extent voiced and unvoiced stops are contrastive in Tasmanian; variations here follow the source.

Pronouns

One unusual feature of Tasmanian pronouns is the apparent lack of distinction between singulars and plurals in all persons:

1 sg. or pl.

**mV-*

W. *ma*, N. *manga* "I, we"
NE., ME. *mina*, SE. *mina*, *mana* "I, we"

2 sg. or pl.

**ni-*

W. *nina*, N. *nena*, *ninga* "thou, you"
NE., ME., SE. *nina* "thou, you"

3 sg. or pl.

Tas W., N.. *nara* "he, she, they"
NE., ME., SE. *nara* "he, she, they"

The finals on the first and second persons are suffixes, as may be seen in their Southeastern possessive forms, *-mia* and *-nia* respectively, and the Western first person which shows the bare root. It might be suggested that these suffixes are identical in origin to the *-na* of common nouns discussed below. But the variant *-nga* of North Tasmanian weighs against this interpretation; the alternation is not phonological, as *-na* appears in Northern common nouns unchanged. On the second person, both variants are cited.

The first person is directly comparable to plural forms in other Pacific languages:

1 pl.

NBr		Anêm *mïn* (excl.), *ming* (incl.)
		Kol *mang*
		Qaqet *m-* verbal subject
CMe	CSo	Lavukaleve *me*, Savosavo *mai* (incl.)
	RSC	Nanggu *ni-mwe*, Banua *ni-mu* (excl.)
	Ros	Yeletnye *n-mu* (free), *ma-* (intr. V. sbj.), *-ma*, *-mö* (V. obj.)

This pronoun is found throughout Indo-Pacific usually signifying the exclusive, often with a nasal suffix.

Anêm shows the same *-n ~ -ng* alternation in the first person plural with a clear semantic significance; *mïn* (excl.) vs. *ming* (incl.). It is unclear whether this is related to the variation in Tasmanian suffixes.

A parallel development to that proposed here for Tasmanian "I, we" may be found on the other side of the Indo-Pacific language area, in Önge of the Andaman islands, where at least one dialect (Brown 1914) has expanded the use of the (cognate) first person plural *m-* to include the singular.

The Tasmanian second-person pronoun base, *ni*, is characteristic of Indo-Pacific as a whole (Greenberg 1971: 844-5), and apparent cognates are well-attested in every branch save Timor-Alor-Pantar, including Madang-Pacific and Australian (where **ni* or **nhi* is overwhelming attested as the Australian second-person singular, despite Dixon's inexplicable contention that Tasmanian *ni(-na)* "shows no significant similarity with recurrent Australian forms" (1980: 233)). It gives rise to both singular and plural forms, which can be distinguished from each other by ablaut, suffixes or, less often, a contrast between *n-* and *ng-* in the root, which is presumably secondary. Following are some Pacific reflexes in both numbers:

2 sg.

NBr		Kuot *nunuo* (free), *nV-*, *-nV* (verbal)
		Anêm *nin* (free), *ni-*, *nï* (verbal subject)
		Taulil *gigi*, *gi* [<< **ngi(ngi)*]
		Qaqet *ngi(e)*
Was		Pele-ata *nini*, *ne-*, *na-*
CMe	Ros	Olango *nni* (free), *nie-* (poss.), Yeletnye *nyii* (free) *N-*, *ni(e)-* (poss.)

2 pl.

NBr	Anem *ngï-*, *ngi-* (V. sbj.)
	Taulil *gan*
	Qaqet *ngen*
	Kol *ngo*
Was	Pele-ata *ngingi*, *ne-*

It appears likely that in Proto-Pacific, the numbers had become distinguished, at least in part, by the quality of the initial consonant, as in Anêm. In this way, the Tasmanian is closest to the singular forms listed above, but the substitution of initial *n-* for *ng-* is very common, and it is easy to see how merger of these sounds in this case could result in homophony.

Whether one form has replaced the other, as with the first person, or the erstwhile plural and singular forms have converged, is impossible to say without a rigorous examination of the sound correspondences pertaining between Tasmanian and the other Pacific languages.

There is also a Northeastern (Ben Lomond tribe) form *nöko* "thou" ('nucco'), attested only in the singular, which might be compared to Madang-Adelbert **na(-kV)* id., where **-kV* is a suffix found on most free pronouns (e.g. Mad/Mab/Murupi *naga* etc., Ade/J-W/Moresada *na-gh* etc.), as well as many other similar forms throughout New Guinea (e.g. Dadibi *na-gi/na-go* (abs./erg.), Foe *na-xa* (abs.). The significance of the Tasmanian final in this case is presently unclear.

A possibly parallel case is offered by the following Tasmanian demonstrative series:

Tas	N. *ni(ka)* "this", *neka-le* "there"
	NE. *ni(ka)* "this, the", *nika(-le)* "here", *neka-le* "there", ME. *neka(-le)* "there", SE. *nika* "this", s:bm *nuka* "this, here"

Similar demonstratives are found throughout Indo-Pacific, including the Pacific branch; e.g. Bilua *nei* "this (f.sg.)", *ni* "these." In several Madang-Adelbert languages, this base is found with a suffix **-kV*, possibly the same as that discussed above (e.g. Ade/J-W/Moresada *ïnï*, Wadiginam *ïnï-k*, Musak *na-ku* "this"), but the evidence here is too scant to warrant certainty.

Finally, consider this word for the third person singular:

3 sg.

NBr		Taulil *von* "he", *va/ve* "his"
Bou		Rotokas *va* "it"
		Buin *po-* "his"
		Nasioi *ba-* "his"
CMe	CSo	Bilua *vo* 3sg.m. (free), *v-*, *-v* (V obj.), Baniata *vo* 3sg.f. (free), *-va* (V obj.)
Tas		W. *bo* "him, her"

This form is only attested in the west, presumably having been replaced by *nara*, a form found in all dialects which encompasses both singular and the plural third persons. This might be itself connected to Qaqet *ngar* "they", but the attestation is too thin to warrant any certainty.

Articles

singular *-na*

A suffix *-na* is found on the vast majority of attested Tasmanian nominals. This particle stumped Dixon who that "a most careful checking of the data and investigation of all sorts of hypotheses fail to throw any light on the function of these 'suffixes' [*-na* and *-ga*]: they appear not to be markers of number, or case, or pronominal possession."

Roth (1890 p.184) treats it as a singulative, writing, "It is possible that the plural may have been expressed by simply omitting the singular termination *-na*, but this is merely surmise."

Capell (1968: 5-6) presents several text examples which illustrate the uncertainties surrounding the use of *-na* in the Eastern dialects, and suggests that the variations seen therein "point to rules of definiteness and indefiniteness which cannot now be recovered." Some rules, though, are very clear. It is absent when the noun is incorporated or preposed as the first member of a compound or phrase, and when another suffix appears; e.g. *wi(-na)* "fire", *wi-ni* "by/in the fire." And it may be dropped when the noun refers to an mass (e.g. "darkness") or plural noun (upon which the paucal *-lia* may appear instead; see below.)

Greenberg (1978) proposed a path for the development of gender markers and fossilized articles in general from what were once definite articles. In this analysis, stage I refers to a fully active definite article, stage II to an article which has lost its connotation of definiteness and now stands a mere marker of nominality (along with whatever gender connotations may be present), and stage III to an erstwhile article which is now fossilized and without synchronic significance.

By this measure, East Tasmanian *-na* is or is well on its way to being a stage II article, with no implication of definiteness or in this case even gender, but merely singular nominality. In North and West Tasmanian, *-na* seems for the most part to be totally fossilized, bringing it to Greenberg's stage III.

Close analogues to this suffix may be found in the Bougaineville and Central Solomon branches of the Pacific group. In the Nasioi and Siwai languages of Bougaineville, *-na* is a definite (stage I) article. In the Lavukaleve language of the Solomons, *na* is a singular stage II article following masculine nouns, and is also found as a third-singular masculine demonstrative *hoi-na* (*hoi-* distant demonstrative prefixed to all third persons). Savosavo postposes *na* to subject nouns and stressed personal pronouns. Finally, Baniata suffixes *-na* to demonstratives and predicative adjectives with neuter gender.

This suffix is not restricted to the Pacific languages. It is found as an article in verious parts of New Guinea, e.g. Kwerba *-na*, Orya *-na* definite article, Kunimaipa *na* indefinite article, etc. Most germanely, in the the Pihom-Isumrud-Mugil branch of Madang-Adelbert, we find *-na* and variants *-na*, *-ne*, *-no* and *-ng* glossed as singulatives.

Whatever connotation of gender this particle may once have carried, if any, is presently unclear, but its transition from stage I definiteness as in Nasioi to stage II in East Tasmanian and finally to stage III in North and West Tasmanian is well-documented.

paucal *-lia*

Southeastern Tasmanian (and perhaps other dialects as well) uses *-lia* as a plural or paucal form. Although Roth, Capell and Schmidt agree in treating this as a plural, all of the published examples

are consistent with a paucal interpretation (e.g. hands, ears, family, (slices of) bread), and in fact most are natural pairs.

A dual or plural suffix of the form *-li* or *-le* is widely attested throughout Indo-Pacific; e.g. Andamanese/Önge *-le* nominal plural; Timor-Alor-Pantar/Bunak *-li* etc., pronominal dual. etc. Reflexes of this ancient suffix are well-attested throught Madang-Pacific.

For instance, both the Rai Coast and Mabuso branches of Madang use **-le* to indicate the dual on pronouns. The Josephstaal-Wanang branch of Adelbert has a suffix **-rV* with the same significance; in some languages (e.g. Siliebi, Katiati, Musak) this has come to include the plural.

In the Rotokas language of Bougaineville, *-re(i)* is the dual on pronouns and regular nominals. Lavukaleve of the Solomon Islands uses *-(V)l* on common nouns and *-la* on pronouns, while Savosavo has *-lo* for the dual on common nouns. Finally, the Aiwö language of Santa Cruz uses *-le* for the pronominal dual.

However, no other reflex of this suffix shows a vocalism comparable to the diphthong of Tasmanian. Perhaps it is more convincing to derive this suffix from the Eastern word for "a few (2-4)"; SE. *lüxye*, *lüa-wa*, ME. *lü(gh)a-wa*, *lu-wa*, NE. *la-wa* "a few (2-4)".

Tasmanian-Pacific Etymologies

Although several fairly regular and obvious sound correspondences have been identified between the languages dealt with below (e.g. Pele-ata *-x-* = Tasmanian *-g-* in "hair, leaf", "leaf", "sing", and "water (fresh)" below), none are dealt with in this paper. In any case, no connections are presented which require extensive or unusual phonological transformations. For let us consider the lexical evidence as presented, which can serve as the basis for future work of this nature.

This list is not by any means an exhaustive inventory of Indo-Pacific reflexes in Tasmanian; items were selected only to demonstrate Tasmanian's membership in the Pacific subgroup.

Note again that there is no phonemic distinction between voiced and unvoiced stops in Tasmanian; variations in this regard belong to the sources.

Etymologies that are known to be reflexes of older Indo-Pacific forms are marked with an asterisk. Some of these were noted by Greenberg (1971); these are noted in brackets as Gr71, followed by the page number and the number of the etymology as it appeared.

belly

CMe	CSo	Lavukaleve *pala*, *vala* "belly", Savosavo *boli* "guts"
	RSC	Nea *bolu*, *bola*, Nambakaengö *bole*
Tas		NE. *pla-na* "stomach"

***bone** [Gr71: 856; IP12]

CMe	Ros	Yeletnye *tïnë*, *dono*, *dona(gai)*, E., W. *dona*, SW., Kwai, Olango *döna*
Tas		SE. *tena*, *tene(-na)*, *teni(-na)* "bone, rib, side"

child (2)

Bou	Siwai *pehkoro*
Tas	SE. *pagarai*

cloud, fog

Bou	Siwai *muna*, *imuina* "cloud"
Tas	NE. *muna*, *mina* "fog", *muni(-na)* "cloud", ME. *mune(-ke-na)* "fog", *mien-teia-na* "clouds

in sky" (really "cloud cover"; *tei(a)(-na)* "fog, obscurement")

c.f. Rai/Usim *menë*, Mab/Munit *min* "cloud"

***cold**

Bou		Buin *kamara-* "be cold"
		Nasioi *kama-ri* "cold"
Tas		N. *kavala*
		NE. *kawlik*, - : sn *kawala*

c.f. Madang-Adelbert **kVm(b)ri.*; e.g. Mad/Rai/Jilim *imbri-*, Ade/J-W/Katiati *kümri*, Musak *kĭbr* "cold", Paynamar *gumrir-* "be cold."

***day**

NBr		Kuot *la*
		Qaqet *lei* "today"
		Kol *al*
Was		Pele-ata *le'iela* "tomorrow"
CMe	CSo	Lavukaleve *le* "day", Bilua *lea* "tomorrow"
Tas		N. *loi-na* "sun, moon, day"
		NE. *le-na* "day, (sun) shines"

***day**

NBr		Anem *u-gë-pëkpëk* "dawn"
Bou		Konua *bogi* "day", Rotokas *voki* "period, day"
CMe	CSo	Bilua *pakoza* "daylight", Savosavo *ivago* "day"
Tas		ME. *pögö-li(-na)* "sun", *pöga* "sun" (homophonous with "man")

c.f. Ade/PIM/Mawak *peki* etc., Bunabun *bagen* "daybreak", etc., Mad/Rai/Saep *fekën* "tomorrow" etc.

***?ear**

CMe	Ros	Kwai *nggwania*, Yeletnye *ngwäne*, *nganea*, Wamiu *ngania*, SW. *nania*, Olangu
Tas		W. *wayi*
		SE. *kwigi*, *kwengi*, *küe(n)yi*, *wayi*, *v(u)egi*, *voigi*

c.f. Ade/PIM/Yarawata *kowania*, Ukuriguma *kauni*, Parawen *kagwa:ni.*

egg

CMe	RSC	Nea *tapiö*, *dapiu*
Tas		ME. *tabi(-na)*

eye, face

CMe	CSo	Lavukaleve *lemi* "eye", Savosavo *la(m)bi* "face"
	RSC	Banua *utu-leimï* "face"
Tas		N. *limön(-rika)* "eye"

***finger, hand**

NBr		Qaqet *rika* "finger", *rix-igl* "hand", *rix-it* "arm" (*-igl* part-of-whole, *-it* sfx. on long things)
CMe	CSo	Savosavo *ririkina* (m.) "finger", *nae-ririkina* "toe"
Tas		N. *ri* "hand", *?rigl* "heel" (*?rily*)
		ME. *rika-(be)-na* "hand", *rika-teni-na* "finger" (*teni(-na)* "bone"), Big River *ri (k)-na*, SE. *ri(a)* "hand", ?SE *logi* (also ME. 'drega')

c.f. ENGH/Kewa *rikini* "fingers, toes".

***fire (1)**

Bou		Rotokas *tuitui*
CMe	Ros	Yeletnye *nduenh*, *ndauwa*, *ndua*, *ndia*, *deua*, E. *nduwe*, W. *ndiu*, Olango, SW. *ndë*,
Tas		W. *toi*
		SE. *to*

c.f. East New Guinea Highlands/Wiru *toe*.

?fire (2)

NBr	Kol *kuong* "fire"
?Bou	Siwai *kunakuna*
Tas	G.A.Robinson (?NW) *kwiong*

c.f. "wood" below.

***hair, leaf**

Was		Pele-ata *laxu*, *laghu*, *lagu-singe* (*kisinge* "head")
CMe	CSo	Bilua *lekona* (c.f. Baniata *-na* neuter 1 noun class), Lavukaleve *legis* "leaf"
	RSC	Nea *lengu*, *langu*, *lengi(-nwa)* "leaf"
Tas		NE. *legowi-na*, *ligowi-na*, *ligëwe* "hair", ME. *lagowë-na* "moss", - : sn *lagöna* "hair"

heavy (1)

Bou	Buin *mokinasi*
	Nasioi *manki*
Tas	ME. *mönge* "load (n.)"

heavy (2)

CMe	RSC	Banua *mule*, Nea *mïle*, Nanggu *imalwe*
Tas		ME. *mura*

***leaf**

NBr	Pele-ata *boloxu*
Bou	Rotokas *purukou* "hair"
Tas	N. *paraka* "flower"
	NE. *paroko* "leaf", ?SE. *poroki*, *paroge*, *perogi* "tree, eucalyptus branch w/leaves"

c.f. Eastern-Trans-Fly/Gizra *poringai, phïrgae, prangae.*

many, all

Bou		Buin *turuge/turugogo* "all (sg./pl.)"
CMe	CSo	Savosavo *supu(-torongo)* "many"
Tas		N. *torangaty* "plenty"
		ME. *tiranga-na* "crowd", *tölan(y)a* "plenty"

mother

NBr		Taulil *tie* (c.f. *tia* "father")
Was		Pele-ata *tie*
CMe	RSC	Nambakaengö *tyia*, Nanggu *ite, ise*, Aiwo *is(i)o*
Tas		NE. *ityie* (c.f. *ityale* "father") [supposedly Pidgin English; Plomley 1976]

***rain**

CMe	RSC	Aiwö *teuwa*, Nambakaengö *tewa*, Banua *tewado*
Tas		W. *taiva*

run, walk

Bou		Buin *rugor-* "walk", Siwai *kura-rakei* (Buin *kuro-* id.)
CMe	CSo	Savosavo *ra(ng)ge, raghe* "run"
Tas		ME. *röngwe, rene, dringe, rönyi* "run"

***sing**

Was		Pele-ata *lexi*
CMe	CSo	Savosavo *linge*
Tas		NE. *legöne* "sing", *langkana*, SE. *-la(ng)gana* "dance", ME. *lyene*

***shoulder**

CMe	CSo	Bilua *vakare*, Lavukaleve *nga-fakas*
Tas		ME. *pugare-na*

c.f. Rai/Arawum *punggali*

speak

NBr		Sulka *mun*
Tas		SE. *muna* "word"

c.f. Ade/PIM/Waskia *munaka-* "talk (intr.)"

thirsty

CMe	CSo	Bilua *kabare*
Tas		N. *kabruta*

c.f. Rai/Bongu *kabragen* "dry"

***tongue** [Gr71: 864; IP76]

Bou	Siwai *mini*
	Nasioi *mene-ng*, *mane-ng*, Koianu *mene*
Tas	W. *mena*, N. *mamana*, *mim*
	NE., SE. *mena*

c.f. Mad/Rai/Siroi *mane*, Saep *men-* etc., /Mab.Bemal, Girawa *mino-*, Ade/Brahman/Faita *menïm*, Tauya *minamo*.

***?walk**

NBr		Butam *taleor* "take a walk", Taulil *tel-tel*
CMe	CSo	Bilua *talio*
Tas		SE. *tolo*, *tola*

***water (fresh)** [Gr71: 862; IP 59][Trombetti 1923: 75]

NBr	Pele-ata *lexa* "water, river"
Tas	NE. *lega*, ME., SE. *lia* "(fresh) water"

c.f. Andamanese/Juwoi etc. *leke* "rain".

***wood**

Bou	Siwai, Buin *kui(-na)*
	Nasioi *koi(-na)* "tree, wood"(*-na* definite article), *koina-vo/koini* "wood (sg./pl.)", Koianu *kai*
Tas	SE. *gui(-na)* "wood"

Australian Loans

In his classic work on the Australian family, which excluded Tasmanian as a member of Common Australian, Capell (1956: 94-95) examined claims of resemblances between Tasmanian and Australian, first with the languages of the supposedly "Tasmanoid" Barrinean pygmies of Cape York and second with the Kulinic languages of Victoria.

Capell found ten lexical resemblances between Tasmanian and Australian: "man," "head," "mouth," "hand," "tooth," "tongue," "foot," "smoke," "fire" (listed below as "tree" etc.), and "stone."

In the interest of history, we should mention that four of these, "fire," "smoke," "two," and "tongue," were presented sixty nine years earlier by Curr (1887: 596), along with the second person singular discussed earlier in this article.

Following Capell, Stephan Würm (1972: 168-74) added "two" to this list, and concurred that "The agreements are essentially with the forms of the Australian words as they appear in the Kulinic and Kurnic Groups of Victoria. Eight of the words are Common Australian in Victorian phonological forms, and three ('man', 'mouth' and 'stone') belong to the Victorian regional vocabularies."

Each of the most convincing comparisons listed below (Capell's comparisons involving "foot," Tas. *toka-na*, Vic. *dina*, and "head," Tas. *elu:ra*, Vic. *wala*, are highly unlikely) is consistent with a scenario in which the Tasmanian tongues have borrowed a fair number of prominent lexes from Kulinic or some very close relative thereof. There is thus far little evidence for loans in the other direction.

The identification of these loanwords addresses one of the most obvious objections to Tasmanian's inclusion in Pacific: specifically, if Tasmanian were seen to retain a good number of words

which are clearly Indo-Pacific (c.f. esp. "tongue," "tooth," "two" below), but are not found in other Pacific languages, this would imply that Tasmanian is an independent branch of Indo-Pacific, coordinate with Pacific but not a member thereof.

In the Kulinic words below, *R* indicates a rhotic, the precise value of which could not be determined from the primary source.

hand

Tas NE. *mönenga* "arm"

Kul **marna(-ng(i))*
Wannon, Warrnambool *maRang* (Bunganditj *marna*, *maRa* id.)
Wuywurrung, Thagungwurrung, Boonwurrung *marnang*, Wadi-wadi *manangi* (c.f. Wemba-beraba, Wimmera, Tjapwurrung , Wergaia *manya*, Wemba-wemba *manyë*, Madhi-madhi *manha*, Djadjawurrung, Wathawurrung *marna*)

Very possible.

?man

Tas N. **péna*
ME. **péna*

Kul Tjapwurrung, Djadjawurrung *pang*, Wemba-beraba, Wimmera *peng* "man",

smoke

Tas SE. *bura-na*

Kul Bunganditj *purluny*
Wadi-wadi *pu(r)ti*, *puRi-ngi*, Ledji-ledji *puRi-ngi*, Wimmera *puriny*, Tjapwurrung *purt*, *puRi*,
Djadjawurrung, Wathawurrung, Wuywurrung, Thagungwurrung *purt*, Madhi-madhi *puyuti*

Cf. Mad/Rai/Sumau *buru,* etc., /MabMunit *ebur,* Ade/PIM/Waskia *bu:r* id.

Schmidt (1952: 391) places this word with **progu:-na* "smoke" (?c.f. Bou/Rotokas *purukai* "ashes"), but derviation from Kulinic might also be considered. There is no special resemblance to nor divergence from the Kulinic forms. It is therefore difficult to say whether the Tasmanian word represents a retention from Pacific or a Victorian loanword.

stone

Tas ***lána* (Schmidt 1952: 257) [maybe really **lánga*]
N. *lóna*, *longa*
NE. *lána*, ME., SE. *loina*, *lóna*

Kul Wuywurrung, Boonwurrung *la:ng*, Djadjawurrung *laarr*, Wemba-wemba, Wemba-beraba *la(rr)*, Tjapwurrung, Wathawurrung *laa*

This word is apparently found nowhere else in either Pacific or Australian, unless it is to be compared to Eastern Australian **thangka*; e.g. Dadidadi *dhangga*, Gugu Bujun *dhan.ga*, etc; c.f. "tooth" below where Kulinic reflects initial **T-* as *l-*.

tongue

Tas W. *töla(-na)*, *tölani*

Kul **thala(-ng(i))*
Boonwurrung, Thagungwurrung, Wuywurrung *tyalang* "tongue", Djadjala, Wergaia *tyaling*,
Wemba Wemba *tyaling/tyalingin/tyalinyug* (ø/thy/its), Madhi-madhi *thalinhu*, *thalingi* "language, tongue",

c.f. Yuin-Kuiric/Gadang *talany*, Dhurwal *thalany*

This ubiquitous Australian root (Capell 1956:74), while also common in New Guinea, Andamanese and indeed much of the world (e.g. Austronesian/W.Cham *dalah* etc., Kordofan/Jomang *dhulunge* etc.),[2] appears in no other Pacific language. The West Tasmanian form **tölani* is basically identical to those of either Kulinic or Yuin-Kuric, and the separation of the article *-na* is a back-formation, either by the Western Tasmanians or by the source, Joseph Millagan, who often seperated words into their constituent parts, but was not always sensitive to small differences in pronunciation (Plomley 1976: 19-20).

It is instructive to compare the distribution of this word with that of Tasmanian **mena* "tongue" presented earlier which is widely cited across Tasmania, as opposed to only in the west, but is absent from Australia. Indeed, its distribution within Indo-Pacific is limited to the New Guinean branch.

tooth

Tas N. *liana* "tooth, bite"
e : st *liana* "teeth"

Kul **lia(-ng(i))*
Boonwurrung, Wathawurrung, Wuywurrung, Thagungwurrung *liang*
Madhi-madhi *liangi*, *lia(ng)*, Wadi-wadi *liangi*, Ledji-ledji *liang(i)*
Wemba-wemba, Wemba-beraba, Wimmera, Tjapwurrung, Djadjawurrung, Djadjala, Wergaia *lia*

The Kulinic word is likely a reflex of Australian **TirrV(-ngk)* (Capell's (1956: 74) Common Australian **lirang*), which itself derives from Indo-Pacific **TiRV(-ngk)* (e.g. Lower Sepik/Yimas *tïrïng*, Chambri *sëlangk*; South New Guinean **terVk*; etc.; also c.f. Austroasiatic/Munda/Kurku *tiring* (Gatti 1908: 53)), however this word does not appear in any other Pacific language, and the Kulinic form is phonologically distinct from other Australian reflexes in showing initial *l-* and in eliding medial *-rr-*.

Either North Tasmanian has borrowed this word from Kulinic, or from earlier inhabitants of Tasmania, and then loaned it to Kulinic. The first scenario seems more likely.

tree, (fire)wood, fire

Tas W. *wi(a)(-na)* "tree, (fire)wood"

---

[2] Note also Proto-Indo-European **dlnǵhuəa* 'tongue' (Hamp), Turkic **dil/*dɨl* 'tongue' (Starostin), Tungusic **dilga-* 'voice' (Starostin); Dravidian **taṭ-* ~ **taṟṟ/tt-* 'tongue' (Blažek); Amerind: Proto-Yokuts **thalxaṭh*, Tsimshian *dula* 'tongue'; Khoisan **tali* 'tongue' (Blažek), etc. [Ed.].

NE., ME., SE. *wi(a)(-na)* "tree, (fire)wood"

Vic Kul **wi(-ny)*
Warrnambool, Wannon *winy* "fire"
Colac *winy* "fire"
Tjapwurrung, Djadjawurrung *wi*, Wathawurrung, Wuywurrung, Boonwurrung, Thagungwurrung *wi:ny*, Gundidj *winy* "fire, firewood"

c.f. Mad/Rai/Yobong, Ganglau, Saep *wi* "tree"
c.f. Wiradhuric/Gamilraay *wii*, *wi:*, Yuwulraay *wi:* "fire, wood", Ngiyambaa *wi:(-n)*, Wiradhuri *winy* "fire", Waka-Kabic/Drambala *wi:nga*, Batjala *wing* "fire"

It is difficult to say whether the Tasmanian word has been retained from New Guinean **wi* plus the article *-na*, or borrowed from Kulinic (Australian **wi(-N)*) with the nasal suffix reinterpreted as the common Tasmanian article. Its presence in Rai Coast shows the root to have been present in Madang-Pacific, but it has not been found in any other Pacific language. In either case, the expected Tasmanian form is exactly the same.

two

Tas SE. *pula*, *pura*, *puali*

Vic Kul Warrnambool *pulatya*, Wannon *pulaty*, Bunganditj *pulaty*, *puwaty*, *pulak*
Colac *pulatuk*
Madhi-madhi *puletha*, *pulerda*, Wadi-wadi *puli*, *pulaty(a)*, Wemba Wemba,

c.f. Vic/Yota-yota *pulapul*, *pulthupul*, Ganai *pulaman*.

This very widespread root (c 316-317) is present in several branches of Indo-Pacific, including at least Andamanese (e.g. Aka-Bea *pòr* etc.) and Australian (Common Australian **bula(dj)* (Capell 1956: 77-78)); however, it is absent from the Pacific group outside of Tasmanian. Schmidt (372) places these Southeastern words with Tasmanian **pia(-wa)*, but the phonology seems a little unlikely. There is nothing about the Tasmanian forms which resembles Kulinic in particular; instead it may as well reflect either pre-Kulinic or some other Australian language, such as any one of a number of languages along the coast of New South Wales which show **pula* alone as well as with suffixes **-R(i)* and **-ng*, or perhaps even the earlier inhabitants of Tasmania. Of the attested Kulinic languages, only Wadi-wadi seems to show the bare form, and it is plausible that the final vocalism results from an elision of **-th*. On the other hand, at least two Kulinic dialects and the closely related Yota-yota of Victoria show a reduplication of the bare form, while Ganai (Kurnic) appends a different suffix to the base.

Acknowledgement: Special thanks to the Santa Fe Institute, Merritt Ruhlen, Paul Whitehouse and to the late Joseph Greenberg, and to John Bengtson for his uncommon patience.

References

PL = *Pacific Linguistics.* Canberra: ANU.
WPNGL = *Workpapers in Papua New Guinea Languages.* Ukarumpa: SIL

Allen, Gerald - Conrad Hurd
1963 *Languages of the Cape Hoskins Patrol Post Division of the Talasea Sub-District, New Britain.* Ukarumpa: SIL.

Bengtson, John - Merrit Ruhlen
1994 "Global Etymologies", in Ruhlen (1994): 277-336.

Birdsell, J.B.
1967 "Preliminary data on the trihybrid origin of the Australian Aborigines." Archaeology and Physical Anthropology in Oceania 2:100-155.

Blake, Barry - Julie Reid
1998 "Classifying Victorian Languages," PL C-147: 1-58.

Blake, Barry - Ian Clark - Sharnthi H. Krishna-Pillay
1998 "Wathawurrung: The Language of the Geelong-Ballarat Area," PL C-147: 49-154.

Blake, Barry - Ian Clark - Julie Reid
1998 "The Colac Language," PL C-147: 155-177.

Brown, A.R.
1914 "Notes on the languages of the Andaman Islanders", *Anthropos* 9: 36-52.

Capell, Arthur
1943 "Notes on the islands of Choiseul and New Georgia, Solomon Islands", *Oceania* 14.
1956 *A new approach to Australian linguistics.* Sydney: University of Sydney.
1975 "What do we know of Tasmanian language?", *Records of the Queen Victoria Museum,* No. 30.
1967 "A lost tribe in New Ireland," *Mankind* 6/10.
1969 "Non-Austronesian languages of the British Solomons", PL A-21: 1-16.

Chowning, Ann
1996 "The Austronesian languages of New Britain", PL A-21: 17-45.

Chung, Chul Hwa - Kyung Ja Chung
1996 "Kuot Grammar Essentials", *Data Papers in Papua New Guinea Languages* 42: 1-75. Ukarumpa: SIL.

Crowley, Terry and R.M.W. Dixon
1975 "Tasmanian", in Dixon, R.M.W. and Barry J. Blake (eds.) (1981) *Handbook of Australian languages*, vol. 2: 392-421. Canberra: Australian National University Press.

Curr, E.M.
1887 *The Australian Race,* vol III. Melbourne: John Ferres, Government Printer.

Dixon, R.M.W.
1980 *The Languages of Australia.* Cambridge: Cambridge University Press.

Dutton, Tom - Malcolm Ross - Darrel Tryon (eds.)
1992 *The language game: papers in memory of Donald C. Laycock* (= PL C-110).

Gatti, Ricardo
1906-09 *Studi sul gruppo linguistico Andamanese-Papua-Australiano,* con una Introduzione del Prof. Alfredo Trombetti. Bologna: Libreria Internazionale Treves di Luigi Beltrami.

Greenberg, Joseph H.
1971 "The Indo-Pacific Hypothesis", in Sebeok (ed.)(1971): 807-71.
1975 "How does a language acquire gender markers?" in Greenberg, Ferguson and

Moravcsik (eds.) (1978) *Universals of Human Language*, vol. 3: 47-83. Stanford: Stanford University Press.
n.d. Indo Pacific Notebooks. Manuscript.
Griffin, Margie
1970 "Buin directionals", PL A-26: 13-22.
Henderson, James E.
1975 "Yeletnye, the language of Rossel Island", in Du75: 817-833.
Henderson, James E. - Anne Henderson
1974 "Languages of the Louisiade Archipelago and environs", WPNGL 3: 39-61.
Hercus, L.A.
1986 *Victorian Languages: A Late Survey*. (= PL B-77).
Hurd, Conrad - Phyllis Hurd
1966 *Nasioi Language Course*. (Port Moresby: DIES).
1976 "Nasioi verbs", *Oceanic Linguistics* 9: 37-78. Honolulu: University of Hawai'i Press.
Jones, Rhys
1874 "Tasmanian Tribes", in Tindale (1974): 317-356
Lanyon-Orgill, Peter A. (ed.)
1975 "The Papuan languages of the New Georgian Archipelago, Solomon Islands", *Journal of Austronesian Studies* 1/1: 122-138.
Laufer, Carl
1950 "Die Taulil und ihre Sprache auf Neubritannien", *Anthropos* 45: 627-640.
1975 "P. Futschers Aufzeichnungen über die Butam-Sprache (Neu-Brittanien)", *Anthropos* 63: 183-212.
Laycock, Donald C.
1969 "Sublanguages in Buin: play, poetry and preservation", PL A-22: 1-23.
Lithgow, David - Oren R. Classen
1968 *Languages of the New Ireland District*. Port Moresby: D.I.E.S..
Müller, Hermann
1915-16 "Erster Versuch einer Grammatik der Sulka-Sprache, Neu-Pommern (Südsee)", *Anthropos* 10: 75-97, 11: 523-52)
Parker, Jim - Diana Parker
1974 "A tentative phonology of Baining (Kakat dialect)", WPNGL 4: 5-43.
Plomley, N.J.B.
1969 *An annotated bibliography of the Tasmanian aborigines*. London: Royal Anthropological Institute, 1969
1976 *A word-list of the Tasmanian aboriginal languages*. Launceston: Author & State of Tasmania.
Rascher, Matthaüs
1904 "Grundregeln der Bainingsprache", *Mitteilungen der Anthropologischen Gesellschaft Wien* 7: 31-85.
Rausch, Sidney H.
1912 "Die Sprache von Südost-Bougainville, Deutsche Salomoninseln", *Anthropos* 7: 105-134, 585-616, 964-991.
Ray, Sidney H.
1928 "The non-Melanesian languages of the Solomon Islands", in W.Koppers (ed.) *Festschrift, publication d'hommage offerte au P. W. Schmidt* (1928): 123-126. Vienna: Mechitaristen-Congregations-Buchdruckerei.
1938 "The languages of the Eastern and South-Eastern divisions of Papua", *Journal of the Royal Anthropological Society of Great Britain and Ireland* 68:153-208.

Roth, H. Ling
1890 *The Aborigines of Tasmania.* London: Kegan Paul, Trench, Trubner & Co.
Ruhlen, Merritt
1994 *On the Origin of Languages.* Stanford: Stanford University Press.
Schmidt, Wilhelm
1952 *Die tasmanischen Sprachen.* Utrecht-Anvers: Spectrum.
Sebeok, Thomas A.
1971 *Current Trends in Linguistics, vol. 8: Linguistics in Oceania.* The Hague: Mouton and Co.
Spriggs, Matthew
1992 "Archaeological and linguistic prehistory in the North Solomons", in Tom Dutton, Ross and Tryon (eds.) (1992): 417-26.
Thurston, William R.
1982 *A comparative study in Anêm and Lusi* (= PL B-83).
1992 "Sociolinguistic typology and other factors effecting change in north-western New Britain, Papua New Guinea", in Tom Dutton (ed.) (1992) *Culture Change, Language Change - some Case Studies from Melanesia* (= PL C-120):123-139.
Tindale, Norman B.
1974 *Aboriginal Tribes of Australia.* Berkeley: University of California Press.
Todd, Evelyn Mary
1973 "Savosavo and the Solomon Language Family", ms.
1975 "The Solomon language family", in Würm (ed.) 1975: 805-846.
Trombetti, Alfredo
1923 "I linguaggi estinti della Tasmania", in *Rendi. Accad. Sci. Bologna, sci. morali* (2), 10: 69-98.
Wheeler, Gerald Camden
1910-11 "A note on the Telei speech of South Bougainveille, Solomon Islands", *Zeitschrift für Kolonialsprachen* 1: 290-304.
Würm, Stephan A.
1969 "The linguistic situation in the Reef and Santa Cruz islands", PL A-21: 47-105.
1972a *Languages of Australia and Tasmania* (= Janua Linguarum, Series Critica 1). The Hague: Mouton and Co.
1972b "Notes on the indication of possession with nouns in Reef and Santa Cruz languages", PL A-35: 85-113.
1975a "The East Papuan phylum in general", in Würm (ed.) (1975): 783-803.
1975b "Possible wider connections of Papuan languages: Papuan and Australian, Greenberg's Indo -Pacific hypothesis", in Würm (ed.) 1975: 925-932.
1981 "The possessive class system in Äiwo, Reef Islands, Solomon Islands", PL A-61.
1982 *Papuan Languages of Oceania* (= Acta Linguistica 7). Tübingen: Gunter Narr.
1992a "Change of language structure and typology in a pacific language as a result of culture change", in Dutton, Ross and Tryon (eds.) 1992: 141-157.
1992b "Some features of the verb complex in Northern Santa Cruzan, Solomon Islands", in Dutton, Ross and Tryon (eds.) 1992: 527-51.
Würm, Stephan A. (ed.)
1975 *New Guinea area languages and language study, vol. 1: Papuan languages and the New Guinea linguistic scene* (= PL C-38).
Z'graggen, John A.
1970 "Languages of the western Madang district", in Würm and Laycock (eds.)(1970) *Pacific linguistic studies in honour of Arthur Capell* (= PL C-13): 1271-1292.
1971 *Classificatory and typological studies in languages of the Madang district* (= PL C-19).
1975 "The Madang-Adelbert Range sub-phylum", in Würm (ed.) (1975): 569-612.
1980a *A comparative word list of the Rai Coast languages, Madang Province, Papua New Guinea*

(= PL D-30).

1980b *A comparative word list of the northern Adelbert Range languages, Madang Province, Papua New Guinea* (=PL D-31).

1980c *A comparative word list of the Mabuso languages, Madang Province, Papua New Guinea* (= PL D-32).

1980d *A comparative word list of the southern Adelbert Range languages, Madang Province, Papua New Guinea* (= PL D-33).

Reflections on Greenberg's *Indo-European and Its Closest Relatives*

Allan R. Bomhard[1]
Charleston, SC, U.S.A.

One of the criticisms often leveled at the Nostratic Hypothesis is the relative dearth of morphological evidence presented by its proponents. Recently, this deficiency has begun to be filled. The late Joseph H. Greenberg has amassed a tremendous amount of morphological evidence in volume 1 of his recent book *Indo-European and Its Closest Relatives*. On the basis of the morphological evidence alone, I believe that Greenberg has successfully demonstrated that Eurasiatic is a valid linguistic taxon of and by itself. The morphological evidence that Greenberg has gathered for determining which languages may be related to Indo-European is the most complete to date and the most persuasive — it goes far beyond what Illič-Svityč was able to come up with, and it also surpasses what was presented in the chapter on morphology by John C. Kerns in our joint monograph *The Nostratic Macrofamily*.

I have tried to demonstrate in other works that Greenberg's Eurasiatic is a branch of Nostratic. If, as I have claimed, that is in fact the case, then there should be clear morphological parallels between Eurasiatic and the other branches of Nostratic, and indeed there are. In what follows, I will present some of the morphological evidence for Nostratic. However, in this paper, I shall not attempt a systematic reconstruction of Nostratic morphology, but, rather, I shall present the evidence in the form of marginalia to Greenberg's book. I hope that, by doing this, it will be clear that the morphological evidence for Nostratic is both abundant and persuasive. For the most part, I will not discuss the Eurasiatic data since these are discussed in detail in Greenberg's book.

General comment

Greenberg did not reconstruct the vowels for the Eurasiatic pronoun stems he identified. However, this shortcoming can be easily remedied since the evidence from the daughter languages (both Eurasiatic and non-Eurasiatic) is fairly straightforward here. Thus: §1. First-Person M: first person independent pronoun (active) **mi*, bound form **-m*. §2. First-Person K: first person independent pronoun stem (stative) **ka*, bound form **-k*. §3. First-Person N: first person independent pronoun stem **na* (on the basis of Korean *na*), bound form **-n*. §4. Second-Person T: second person independent pronoun stem **ti*, bound form **-t*. §5. Second-Person S: second person independent pronoun stem **si*, bound form **-s*. For §6, Second-Person N, on the other hand, the evidence in Eurasiatic makes it difficult to reconstruct the vowel — indeed, as Greenberg notes, the very existence of a second person pronoun **N* in Proto-Eurasiatic is questionable (but see below).

[1] Past ASLIP President.

§1. First-Person M

Etruscan: Note Etruscan *mi* 'I', *mini* 'me.'

Afroasiatic: This stem appears only in Chadic as an independent pronoun. It also serves as the basis of the first singular verbal suffix in part of Highland East Cushitic: cf. the perfect endings in Hadiyya: *-ummo*, Kambata: *-oommi*, and Sidamo: *-ummo*. In Burji and Darasa, on the other hand, the perfect suffixes are *-anni* and *-enne* respectively, which are based upon the stem Greenberg discusses in §3. First-Person N.

Kartvelian: Proto-Kartvelian **me-*, **men-* first person personal pronoun stem > Georgian *me-*, *men-*, *mena-*; Mingrelian *ma-*; Zan *ma*, *man*; Svan *mi-*. Also note Georgian *m-* first person singular verb prefix (objective conjugation), which is also found in Svan as the first person personal formant (extravert).

Sumerian: (Emesal) *ma(-e)*, *me-a*, *me-e* 'I'.

§2. First-Person K

Indo-European: I have difficulty in accepting Greenberg's basis for writing the Hittite (and Luwian) laryngeal as *x*. I prefer the traditional transcription *ḫ*, which, of course, says nothing about the phonetics. Greenberg should have given a little explanation here and mentioned that some scholars (Sturtevant and Lehmann, for example) have interpreted **ḫ₂* as a voiceless velar fricative /x/.

I agree with Greenberg's statement that "The perfect is originally stative and cannot take an object", but not with his comparison of the Hittite-Luwian endings and earlier Indo-European first person perfect ending **-Ha* with the forms from the other Eurasiatic languages. Rather, I would prefer comparison with the heretofore unexplained first person perfect endings in **-k-* found, for example, in Tocharian A (preterit active) *tākā* 'I was', Latin *fēcī* 'I made', Greek ἔθηκα 'I placed', etc. Elsewhere (Bomhard 1996:94), I have compared the Proto-Indo-European first person perfect ending **-Ha* with the Elamite first person ending *-h* (note that David McAlpin 1981:122, §552.0, derives the Elamite first person forms in *-h* from Proto-Elamo-Dravidian **H*). Let's look at this in a little more detail:

The perfect reconstructed by the Neogrammarians for Proto-Indo-European was distinguished from the present and aorist by a unique set of personal endings in the indicative, namely, first person singular **-Aa* (cf. Sanksrit *véd-a* 'I know', Greek οἶδ-α, Gothic *wait*), second person singular **-tHa* (cf. Sanskrit *vét-tha* 'you know', Greek οἶσ-θα, and Gothic *waist*), third person singular **-e* (cf. Sanskrit *véd-a* 'he/she knows', Greek οἶδ-ε, and Gothic *wait*). Except for Armenian and Balto-Slavic, the perfect remained in all branches. It was least changed in Indo-Iranian, Celtic, and Germanic. In Greek, however, it was mixed up with a κ-formation and, in Italic, with a whole series of non-perfect tense forms. According to Greenberg, the perfect was originally stative, and Winfred Lehmann,

Thomas Gamkrelidze and Vjačeslav Ivanov, Andrew Sihler, and others have made similar assertions. Sihler (1995:564—590) gives an excellent overview of the stative in Indo-European.

Now, Greek has a unique formation, the so-called "first perfect", which would be better named the "κ-perfect". As noted by Sihler (1995:576): "Its inception must belong to prehistoric G[reek], for it is already established, within limits, in Hom[er] and in the earliest records of other dialects." Moreover, Sihler notes (1995:576): "In Hom[er] the formation is found in some 20 roots, all ending in long vowel (from the G[reek] standpoint), and in all of them the κ-stem is virtually limited to the SINGULAR stems which actually contain a long vowel... Later the formation, by now more accurately a κα-perfect, spreads to other stems ending in a long vowel, then to stems ending in any vowel (including denominatives), and finally to stems ending in consonants, and to all persons and numbers." This is very important, for Sihler here traces the expansion of this stem type within the history of Greek itself. Thus, we are dealing with developments specific to Greek. Buck (1933:289—290) agrees with Sihler.

In Latin, we find first singular perfect forms *fēcī* 'I did' and *iēcī* 'I threw' (N.B. *faciō* and *iaciō* are "secondary elaborations based on these" [Sihler 1995:562]). As in Greek, the *-c-* [k] is found in all persons (cf. third singular *fecit*), and, as in Greek, the *-c-* [k] has given rise to secondary formations.

The *-k-* forms are also found in Tocharian, as in first singular preterite active *tākā* 'I was', and, as in Greek and Latin, the *-k-* is found in all persons and has given rise to secondary formations. Van Windekens (1976.I:495—496) goes so far as to posit Proto-Indo-European **dhēq-*, **dhə$_1$q-*, as does Rix (1998:120—121).

On the basis of the evidence from Greek, Latin, and Tocharian, we may assume that a "suffix" **-k-* is to be reconstructed for late-stage Proto-Indo-European — what I have often referred to as "Disintegrating Indo-European". This "suffix" originally had a very limited distribution — it seems to have appeared only in the perfect (< stative) singular of verbs that ended in a long vowel, when the long vowel originated from earlier short vowel plus laryngeal. All of the other formations found in Greek, Italic, and Tocharian are secondary elaborations. But, we can go back even farther — it is my contention that the *-k-* originally characterized the first person exclusively, from which it spread to other persons. Of course, this suggestion is not new. Sturtevant (1942:87—88) suggested that **-k-* developed in the first person singular when a root-final laryngeal was followed by the ending **-xe* (that is, **-H_2e* [Kuryłowicz would write **-$\underline{H}_2e$*]). Though a laryngeal explanation along these lines has not been generally accepted, the suggestion that the *-k-* was originally confined to the first person singular is still worthy of consideration, especially in view of the extensive evidence from other Nostratic languages.

Elamo-Dravidian: David McAlpin (1981:119—120, §542.1) reconstructs a first person singular appellative personal ending **-kə* for Proto-Elamo-Dravidian, and this undoubtedly belongs with the forms Greenberg is discussing. Note the first person personal possessive pronominal enclitic in Brahui: *-ka*; note also the locutive *-k* in Elamite in, for example, *u...sunki*-**k** 'I am king' or *huttah halen*-**k** 'I made it at great pains' (*hutta-h*, predicate; *halen*-**k**, included form, locutive).

For Proto-Dravidian, Zvelebil (1990:35—36) reconstructs a first person singular non-past personal ending *-*N-ku*, found, for example, in Old Tamil (archaic non-past) -*Ø-ku* and in Gondi (future) -*k-ā*, while the first person plural exclusive non-past personal ending was *-*N-kum*, found, for example, in Old Tamil (archaic non-past) first person plural exclusive -*Ø-kum* and in Gondi (future) first person plural exclusive -*k-em*, first person plural inclusive -*k-āṭ*.

Afroasiatic: Diakonoff (1988:72—73) lists independent personal pronouns of the direct case in a table. For Proto-Semitic, he reconstructs first person singular **'an-āku*, **'an-ā*, and **'an-ī*, that is, a stem **'an-* followed by three suffixal elements, the first of which, **-āku*, appears to contain a double suffix, that is, the **-ā* found in the second form further extended by **-ku* (cf. Moscati 1964:103—104, where the Proto-Semitic form is reconstructed as **'anā[ku]*). **-ku* is a widespread marker of the first person singular in the stative (cf. the table in Diakonoff 1988:92—93). However, note that Dolgopolsky (1984:70) does not analyze **-āku* as a compound suffix. In the same article, it may be noted, Dolgopolsky reconstructs a Proto-Nostratic **HVkE*, which he describes as either a "non-pronominal word liable to replace the independent pronoun" or as a "nomen regens following an appositional nomen". This **-ku* also appears in the Egyptian first person singular pronoun *ỉn*-**k** and the Tashelhit (Berber) first person singular pronoun *nki* in the table given by Diakonoff. It is this **-ku* that I would compare with the forms Greenberg is discussing. This appears to be a more plausible explanation, by the way, than that offered by Barth (1913:4), where **'anāku*, *-ki* is analyzed as **'ana* plus demonstrative **ku*, **kī*. There is also evidence in several non-Semito-Egypto-Berber Afroasiatic languages: in Oromo of Wellegga (East Cushitic), the first person singular possessive suffix is *-koo*, and this is also found in Dasenech (East Cushitic) *-cu* ~ *-cú*; in Gamo (Omotic), the first singular indicative negative marker is *-ke*, while the first plural is *-ko*; Xamir of Lasta (Central Cushitic) first person singular past verbal suffix *-ékun*, plural *-nekún*; Xamir (Central Cushitic) first person singular non-past verbal suffix *-åkŭn*, plural *-nåkŭn*; Quara (Central Cushitic) first person singular non-past verbal suffix *-äkū*, plural *-näkū*.

§3. First-Person N

Afroasiatic: There is evidence for a first person singular **nV* in Afroasiatic as well: (1) Chadic independent pronoun: Hausa *ni* 'I, me'; Ngizim *na(a)* 'I'; Mubi *ni* 'I'; (2) Semitic: first person verb suffix: Akkadian *-ni*, Ugaritic *-n*, Hebrew *-nī*, Arabic *-nī*, Geez *-nī*, etc.

Indo-European: Note Tocharian B first singular (nom.) *ñäś/ ñiś*, Tocharian A *näṣ* (nom. m.)/*ñuk* (nom. f.). Initial *ñ-* may be derived from earlier **nị̂(ä-)* (ultimately < **n-i-* ?). Indo-Europeanists have been at a loss about how to account for the Tocharian forms (cf. Adams 1999:265—266), and most of the explanations offered to date have been makeshift at best. Assuming that Tocharian has preserved an original **n(-i)-*, which has been lost elsewhere within Indo-European, may be a simpler explanation. This is quite speculative, however.

Sumerian: In Emegir, the first singular (subject) is *ĝá.e* (= /ŋa-/) 'I'. This may belong here if we assume that the original form contained an initial velar nasal, which was retained in Sumerian, having been replaced by a dental nasal in Nostratic.

More common is first person plural stem **na-/*nə-*:

Indo-European: Proto-Indo-European **ne-/*no-/*n̥-s-* used in the oblique cases of the personal pronoun of the first person dual and plural (cf. Sanskrit [acc.-dat.-gen. dual] *nau*, [acc.-dat.-gen. pl.] *nas*).

Kartvelian: Svan *näj* 'we'.

Afroasiatic: Proto-Afroasiatic **na- ~ *nu-* first person plural personal pronoun stem: cf. Arabic *naḥnu* 'we'; Old Egyptian *n* 'we'; Tamazight (independent) *nukni* 'we', (indirect, after prepositions) *nəx*; Oromo of Wellegga first plural present suffixes (affirmative) *-na*, (negative) *-nu*, independent (subject) *nuy*, (base) *nu*; Dizi first plural suffixes (with auxiliary) *-n*, (without auxiliary) *-nno*, (subject) *inu*, (object) *in*, (possessive affix) *n-*.

Dravidian: Proto-Dravidian **nă̄m-* 'we' (inclusive).

§4. Second-Person T

Etruscan: Perhaps *θi* — the meaning is unknown, but it may well be the second singular personal pronoun in view of the second singular imperative endings *-ti*, *-θ*, *-θi*.

Afroasiatic: In Semitic, it occurs first as the second component in the second person independent pronoun: cf. Arabic second person singular masculine *'anta* (= *'an-* + *ta*), second singular feminine *'anti* (= *'an-* + *ti*) (cf. Moscati 1964:102: "The first and second persons singular and plural belong to the same system [*'an-* plus suffixes] ..."). Next, it appears as a second person personal affix, prefixed in the imperfect ("atelic") and suffixed in the perfect ("telic"):

	Imperfect	**Perfect**
masculine	**ta-*	**-t-a*
feminine	**ta-...-ī*	**-t-ī*

In later Egyptian, it also forms part of the second person independent personal pronoun: (m. sg.) *nt-k* 'you', (f. sg.) *nt-ṯ*; (m. pl.) *nt-ṯn*, (f. pl.) *nt-sn*. In Berber, this stem also appears as a second person personal affix (cf. the Tashelhit second person personal affix (m./f.): *t-...-t*), and likewise in Beja (Cushitic) (second person personal prefix, "old" conjugation: [m.] *te-...-a*, [f.] *te-...-i*). Also note the Highland East Cushitic second singular nominative pronouns: Burji *a-ši*, Darasa *a-ti*, Hadiyya *a-ti*, Kambata *a-ti*, Sidamo *a-ti*, and the conjunctive suffixes (sg.): Burji *-ši*, Darasa *-tee*, Hadiyya *-ta*, Kambata *-ti(ke'i)*, Sidamo *-te*.

From Southern Cushitic, cf. the second singular independent pronoun in Dahalo, for example: (m.) *ʔát:à*, (f.) *ʔàt:à*.

Elamo-Dravidian: In Proto-Elamo-Dravidian, this stem appears as the second singular appellative ending **-ti* > Proto-Elamite **-tə*, Proto-Dravidian **-ti* (cf. McAlpin 1981:120, §542.3). Cf., for example, the conjugation of *hutta-* 'to do, to make' in Middle Elamite:

Person	Singular	Plural
1	*hutta-h*	*hutta-hu* (< *h* + *h*)
2	*hutta-***t**	*hutta-h***t** (< *h* + **t**)
3	*hutta-š*	*hutta-hš* (< *h* + *š*)

§5. Second-Person S

When I was doing research for my co-authored book *The Nostratic Macrofamily*, I considered the evidence for a second person pronoun stem **si* and rejected it. At that time, I thought that this stem may have been secondarily derived, at the Proto-Nostratic level, from **ti* as follows: **ti* > **t̲si* > **si*. I thought that the Georgian second person pronoun *šen* may ultimately have had the same origin (**š(i)* < **t̲ši* < **ti*). However, I reasoned that the original stem must not have been lost either, so that there was a split which resulted in two competing forms at the Proto-Nostratic level. Considering the evidence Greenberg presents, my former views should be abandoned, and two distinct second person pronoun stems should be recognized, viz., **ti* and **si*. This certainly is much more straightforward than the scenario I had previously envisioned.

Kartvelian: Note the second person verb prefix *s-* found in Old Georgian (present) *s-c'er* 'you write' and the second singular personal pronoun in Mingrelian: *si* 'you', Laz: *si(n)* 'you', and Svan: *si* 'you'. Klimov (1998:164) reconstructs Proto-Kartvelian **sen* 'you' (sg.). In Georgian, this stem has been replaced by that of the possessive pronoun: *šen-* 'you' (< **škwe[n]-*). The Kartvelian evidence strengthens the case for an independent second person pronoun stem **si* in Proto-Nostratic.

§6. Second-Person N

While the evidence for this stem in Eurasiatic is not plentiful, it is found in other Nostratic languages. Note, for example, that the Proto-Dravidian second person pronoun has been reconstructed as (sg.) **nĭn-*, (pl.) **nĭm-*, while Elamite has (nom. sg.) *ni* ~ *nu* 'you', (acc.) *nun*. Interestingly, one finds this stem as far afield as Omotic (cf. Zayse second singular [subject] *né[j]* 'you', bound form *-n*; Gimira [subject] *nen*[3] 'you', [oblique] *ni*[4]; Yemsa [Janjero] *ne* 'you'; etc.). So perhaps we might be justified in reconstructing a Proto-Nostratic second person pronoun **ni*, which has survived only in relic forms in Eurasiatic.

§7. Pronoun Base GE

First, note that this element is also found in Kartvelian: Old Georgian demonstrative stems *ege* (second person) 'that' and *igi* (third person) 'that yonder', which are to be analyzed as *e+ge* and *i+gi* respectively. On the Indo-European side, the only evidence for **eĝhŏ-m*, with *-ĝh-*, comes from Indo-Iranian (and perhaps Slavic). Elsewhere, the evidence from the daughter languages points to earlier **eĝŏ-m* (Greek, Latin, Germanic) or even **eĥŏ-m* (Lithuanian and Armenian). What this means is that there were multiple pronominal elements involved (at least in Indo-European), not just **-ĝh-*.

§10. Demonstrative KU

The evidence from all of the Nostratic daughter languages seems to point to the existence of two stems here: (A) **ku- ~ *ko-* (distant) and (B) **ka-* (proximate).

Afroasiatic: Highland East Cushitic: Burji (m. sg.) *kú* 'this', (m./f. sg./pl.) *káaci* 'that, those', (m./f. pl.) *cí* 'these'; Darasa (m. sg./pl. *kuuni* 'this, these', (m. sg./pl.) *ikki* 'that, those'; Kambata (m. sg./pl., f. pl.) *ku* 'this, these'; Sidamo (m. sg.) *kuni* 'this', (m. sg., m./f. pl.) *kuuĝu* 'that, those', (m. pl.) *kuni*, *kuri* 'these'. Proto-Southern Cushitic (m.) **ʔuukaa* 'this', (m. bound) **kaa* 'this' > Iraqw *ka* 'this' (neuter ?); Burunge (m.) *ki* 'this', (m.) *kaĝa* 'that'; K'wadza *-(u)ko* masculine gender marker; Asa *-(u)k-*, *-ok* masculine gender marker; Ma'a *ka* 'this'; Dahalo *ǵuukwa* 'this'.

Kartvelian: Proto-Kartvelian pronoun stem **-k-*: Georgian [*-k-*]; Mingrelian [*-k-*]; Laz [*-k-*]. In the modern Kartvelian languages, this stem is found only in historical derivatives (cf. Klimov 1998:211).

Etruscan: Note the demonstratives (archaic) *ika* 'this', (later) *eca*, *ca*.

§11. Demonstrative T

It seems that three separate stems are to be reconstructed here, indicating three degrees of distance: (A) **ta-* (proximate), (B) **tu- ~ *to-* (distant), and (C) **ti- ~ *te-* (intermediate).

Afroasiatic: Proto-Afroasiatic **ta-* (~ **tu- ~ *ti-*) demonstrative stem: Proto-Semitic **tā-/*tǐ-* demonstrative stem > Arabic (m.) *tǐ*, (f.) *tā* 'this'; Tigre (m.) *tū*, (f.) *tā* 'this'. Egyptian (f. sg. demonstrative and definite article) *tȝ* 'this, the', (f. sg. demonstrative adj.) *tn* 'this'; Coptic *t-*, *te-* f. sg. definite article. Proto-East Cushitic **ta*, (subj.) **tu/*ti* f. demonstrative pronoun stem > Burji (dem. f.) *ta*, (subj.) *ci* 'this'; Somali (dem. f.) *ta*, (subj.) *tu*; Rendille *ti* f. gender marker and connector; Oromo / Galla *ta-*, (subj.) *tu-*; Sidamo *-ta*, (subj.) *-ti* f. article; Kambata (f. acc. sg. demon. det.) *ta* 'this'; Hadiyya (f. acc. sg. demon. det.) *ta* 'this'. Proto-

Southern Cushitic (f. bound demonstrative stem) **ta* 'this, that' > Iraqw *ti* 'this'; Burunge *ti* 'this', *taĝa* (f.) 'that'; K'wadza *-(i)to, -(e)to* f. gender marker; Asa *-(i)t(o), -(e)t(o)* f. gender marker; Ma'a *-eta* suffix on f. nouns; Dahalo *ṯá-* in *ṯáĝini* (f.) 'they'.

Dravidian: Tamil *tām* (obl. *tam-*; before vowels *tamm-*) 'they, themselves; you'; Malayalam *tām* (obl. *tam-, tamm-*) 'they, themselves; you'; Kota *ta·m* (obl. *tam-*) 'themselves'; Toda *tam* (obl. *tam-*) 'themselves'; Kannaḍa *tām* (obl. *tam-*), *tāvu* (obl. *tav-*) 'they, themselves; you'; Koḍagu *taŋga* (obl. *taŋga-*) 'themselves'; Telugu *tāmu* (obl. *tam-, tamm-*), *tamaru, tāru* 'they, themselves; you'; Naikṛi *tām* 'they, themselves'; Parji *tām* (obl. *tam-*) 'they, themselves'; Gadba (Ollari) *tām* (obl. *tam-*) 'they, themselves'; Kuṛux *tām-* (obl. *tam-*) 'they, themselves'; Malto *tám, támi* (obl. *tam-*) 'they, themselves'.

Etruscan: Note the demonstratives *ita, ta* 'this'.

§12. Demonstrative S

Afroasiatic: Traces of this stem may be found in East Cushitic. Sasse (1979:34—35) reconstructs Proto-East Cushitic third person personal pronoun stems (m.) **'us-uu*, (f.) **'iš-ii* (secondary palatalization of *-s-*). Note also the third person accusative suffixed pronouns in Kambata and Sidamo:

	Singular		Plural
	Masculine	Feminine	
Kambata	*-si*	*-se*	*-(s)sa*
Sidamo	*-si*	*-se*	*-nsa*

And, in Omotic, we find Zayse third person singular independent pronouns (masculine) *ʔésí*, (feminine) *ʔísí*, and bound suffix pronouns (masculine) *-s*, (feminine) *-is*.

§13. Substantivizer RE

It is interesting to note that Sumerian (which is not a Nostratic language but which I consider to be distantly related to Nostratic) has a distant demonstrative stem *ri* 'that yonder', which may be compared with the form Greenberg is discussing. Also, note the *-r* found in the Elamite third singular personal pronoun *i-r* (I accept McAlpin's view that Elamite and Dravidian are related, and I consider both to be Nostratic). Within Indo-European, a trace of this element may survive in the Cuneiform Luwian enclitic particle *-r* (on which, cf. Melchert 1993:182 and Laroche 1959:83).

§14. Dual KI(N)

Sumerian: Of interest here are the forms *ki-$^{me\text{-}en}$min* 'two', *ki-2-en-ta* 'twice', and *ki-2-šè$^{(še)}$* 'twice', where the common element *ki-* resembles both in form and meaning the dual form **ki(n)* that Greenberg posits for Eurasiatic.

Afroasiatic: Note Egyptian *ky*, *kꜣ*, *kỉỉ* 'other, another'; Coptic *ke* 'another'.

Indo-European: At the very end of the discussion (p. 106), Greenberg briefly mentions the Armenian plural ending *-kʰ* (= *-kʿ*), which, as he notes, has always been enigmatic. I would remove Armenian from this section and put it in §18. Plural KU. The Armenian ending *-kʰ* has no known parallels in other Indo-European languages and is usually considered to be a development specific to Armenian, without clear explanation (cf., for example, Godel 1975:102, §5.22, and Rüdiger Schmitt 1981:111—112). To be sure, a suffix **-k(o)-* is well represented in other Indo-European daughter languages — it is found, for instance, in Latin *senex* 'old man', Greek μεῖραξ 'young man, lad', and Sanskrit *sanaká-ḥ* 'old' —, but it usually does not change the meaning except in a few cases where it seems to add a diminutive sense (as in Sanskrit *putraká-ḥ* 'little son'). Nothing would lead one to think that this ending could have been the source of the Armenian plural ending *-kʰ*. At the same time, I find it hard to believe that a Proto-Eurasiatic plural marker **-k(V)* could have been preserved in Armenian and have left absolutely no traces in the other Indo-European daughter languages, at least none that I can find — and yet, there it is!

§15. Plural T

Kartvelian: Note that a plural marker *-t(a)* is also found in Kartvelian in the so-called "*n*-plural"; cf. the Old Georgian *n*-plural case forms for *perq-i* 'foot':

Nominative	*perq-n-i*
Ergative	*perq-t(a)*
Genitive	*perq-t(a)*
Adessive	*perq-t(a)*
Dative	*perq-t(a)*
Instrumental	*perq-t(a)*
Adverbial	*perq-t(a)*
Vocative	*perq-n-o*

Thus, there are really only three distinct case forms in the *n*-plural, namely, nominative, vocative, and oblique (that is, all the other cases). There is also a plural marker *-eb-*, which was probably originally collective. The plural ending *-t(a)* is also found in pronoun stems in the oblique cases. Finally, note that a plural marker *-t* is found in verbs as well — cf., for instance, the Old Georgian present forms of the verb *c'er-* 'to write':

	Singular	Plural
1st person	*v-c'er*	*v-c'er-t*
2nd person	*s-c'er*	*s-c'er-t*
3rd person	*c'er-s*	*c'er-en*

Afroasiatic: A plural marker *-ta* is also found in Cushitic: In Kambata, for instance, the most common plural suffix is *-ata*: *duuna* 'hill', (pl.) *duunnata*. This suffix occurs elsewhere in Highland East Cushitic: cf. the Sidamo plural suffix *-oota* in *ballicca* 'blind one', (pl.) *balloota*. Also note Oromo: *nama* 'man', (pl.) *namoota*.

§17. Plural RI

Dravidian: Note here the Proto-Dravidian plural marker **-(V)r*, used with nouns of the personal class and pronouns (cf. Tamil *avaṉ* [sg.] 'that man', [pl.] *avar* 'those people'). Particularly interesting is the close agreement here with Manchu, where, as Greenberg remarks, the plural *-ri* is confined to certain kinship terms. Moreover, the **-ri* that Benzing reconstructs for Tungus as the plural of reflexive pronouns also fits in with what is found in Dravidian.

Etruscan: Note the plural endings *-ar*, *-er*, and *-ur* (cf. [sg.] *clan* 'son', [pl.] *clenar* 'sons').

Afroasiatic: A plural marker *-r* is also found in Omotic: cf. the typical Zayse plural suffix *-ir* in *šóoš* 'snake', (pl.) *šóoš-ir*.

Kartvelian: Also worth noting is the Svan plural ending *-är*. In Upper Bal, this is changed to *-äl*, but in Lower Bal, *-är* has mostly been generalized.

§18. Plural KU

Dravidian: The most common plural marker in Proto-Dravidian has been reconstructed by Zvelebil (1977:12—15) as **-(n)kVḷ(u)*. According to Jules Bloch, however, this suffix has developed from the coalescence of the two plural markers **-k(V)* and **-Vḷ(u)*. Specifically, Zvelebil remarks: "...from the existence of only the reflexes of **k* in North Dravidian (Brahui) and Gondi-Konda Kui-Kuvi, we may infer that the *velar stop* is preferably to be regarded as the earliest Dravidian suffix of substantive plurals of the non-personal class." The Dravidian plural suffix **-k(V)* may be compared with the forms Greenberg is discussing.

Indo-European: On Armenian, see above (§14. Dual KI[N]).

§20. Collective L

Dravidian: We should probably include the Dravidian plural marker **-Vḷ(u)* mentioned directly above.

§21. Personal N

My comments will only address the pluralizing function of N.

Afroasiatic: In Geez, the masculine external plural is *-ān*, which is related to the Akkadian plural marker (nom.) *-ānu*. This may belong with the forms Greenberg is discussing. This suffix occurs elsewhere in Afroasiatic: In Burji, for example, there are a few plurals formed with a suffix *-nna/-nno*: *gót-a* 'hyena', (pl.) *got-ínna*; *saa-yí* 'cow', (pl.) *saay-anna*, *sa-ynaa*; *rud-áa* 'sibling', (pl.) *rud-áannoo* (data from Sasse 1982). Note also the plural suffix *-n* in Berber: Tamazight *ass* 'day', (pl.) *ussa-n*; *asif* 'river', (pl.) *i-saff-ən*. In Tamazight, *i-* is prefixed, and *-n* is suffixed to masculine nouns to form so-called "sound plurals", while the prefix *ti-* and the suffix *-n* serve the same function for feminine nouns (in rare cases, one finds *ta-...-in* instead). Nouns ending in vowels add one of the following suffixes: *-tn*, *-wn*, or *-yn*. Thus, the common marker for "sound plurals" in Tamazight is *-n*. (There are also so-called "broken plurals", which do not add *-n*.) In Semitic, there is a so-called "intrusive *n*" found in the plural of the personal pronouns. Though Gelb (1969:50—53) explains this as "a consonantal glide introduced in order to avoid two contiguous vowels", it is curious that it is only found in the plural and that no such "consonantal glide" appears to be needed elsewhere. This leads me to suspect that we may be dealing here with a relic of the suffix Greenberg has identified.

Sumerian: In Sumerian, the plural of animate nouns is indicated by the suffix *-ene*. This appears to be close both in form and function to the material Greenberg has gathered.

Indo-European: There is also evidence for a plural marker **-n* in Indo-European. In Hittite, the first person plural personal endings are (present) *-weni* (occasionally also *-wani*; but *-meni* after stems ending in *-u-*), (preterit) *-wen* (*-men* after stems ending in *-u-*); the second person plural personal endings are (present) *-teni* (occasionally also *-tani*), (preterit) *-ten*. In Greek, there is a first plural ending (primary and secondary) -μεν (there is also an alternative ending -μες). In Sanskrit, in addition to the second plural personal endings (primary) *-tha* and (secondary) *-ta*, there are extended forms *-thana* and *-tana* respectively. In Sanskrit, the first plural endings are (primary) *-mas*, *-masi* and (secondary and perfect) *-ma*, that is to say, they do not contain the plural marker *-n* found in Hittite and Greek. It is thus now clear how the different plural personal endings found in the daughter languages came to be. The earliest forms were (first person plural) **-me* and (second person plural) **-te*. These could be extended (optionally) by an ancient plural marker **-n*, yielding **-men* and **-ten* respectively. At a later date, when the so-called "primary" endings were formed, these endings could be further extended by the primary marker **-i*, giving **-meni* and **-teni*

respectively. On the other hand, the plural marker *-*s* could be used instead, at least with the first person plural, yielding *-*mes*, and, later, with the addition of the primary marker, *-*mesi*.

§23. Absolutive K

Elamite: Perhaps Elamite passive participles, which "are formed by the addition of the morpheme */k/* to any verb-base" (cf. Reiner 1969:84, §5.1.2), should be considered here. The examples that Reiner gives are: *hutta-k-* 'done', *turu-k-* 'said', *hutla-k-* 'messenger' (literally 'sent'), and *miši-r-ma-k* 'ruined (?)'.

§24. Accusative M

Dravidian: The Proto-Dravidian accusative ending has been reconstructed as *-*(V)n* (cf. Zvelebil 1977:27—31). Note also the Elamite accusative ending *-n* found in the declension of personal pronouns: first singular (nominative) *u* 'I', (acc.) *un*; second singular (nom.) *nu* 'you', (acc.) *nun*; etc. McAlpin (1981:109, §522.1) sets up a Proto-Elamo-Dravidian accusative singular ending *-*n*. This is not, however, quite as straightforward a comparison as I have made it out to be. In general, final *-*m* is preserved in Dravidian (though, in at least one case, namely, the Proto-Dravidian nominative suffix of some nouns with stems ending in *-a*, *-*m* alternates with *-*n* finally; cf. Zvelebil 1970:127), and, therefore, we would expect the accusative ending to have been *-*(V)m* instead of *-*(V)n* (but note McAlpin 1981:92, §314.2: "The reflexes of PED **m* are clear only in the first syllable. After that Elamite and Dravidian attest both *n* and *m* finally; *n* more commonly in Elamite, *m* more commonly in Dravidian [symbolized as PDr. **N*]. This is really no different from the situation in Dravidian where the common formative PDr. **-aN* ... is attested in both *m* and *n* [but never in alveolar *n̲*] ..."). But, considering that an *-m* ~ *-n* variation occurs throughout Nostratic for this case, the Dravidian forms may still belong here if we assume that the variation went all the way back to Proto-Nostratic itself.

Etruscan: Note the accusative singular ending *-n* found in the following demonstrative stems: (archaic) *ikan* 'this', (later) *ecn*; *itan*, *itun*, *etan*, *tn* 'this'.

Afroasiatic: There may be traces of this ending in Omotic. In Aari, "[i]n direct object function the head of a definite NP receives an accusative suffix -m." (Hayward 1990:443). Likewise in Dime, "[d]irect objects are indicated by the suffix -im attached to the stem of the object noun" (Fleming 1990:518).

§25. Genitive N

In Greenberg's book, this whole section is extremely powerful and well presented. Many of the same conclusions were reached by John C. Kerns in his discussion of Nostratic morphology in our joint monograph (1994:141—190, Chapter 3: "Nostratic Morphology and Syntax").

Dravidian: Note the Proto-Dravidian genitive ending (adnominal) **-in*. McAlpin (1981:110) reconstructs Proto-Elamo-Dravidian genitive singular (adnominal) **-in*, from which he derives Proto-Elamite **-inni* and Proto-Dravidian **-in̲*. In the following section, he also discusses the genitive *-na* found in Achaemenid Elamite.

Etruscan: In Etruscan, in addition to the regular genitive endings in *-s*, there is an archaic genitive in *-n* (*-an*, *-un*): cf. *lautn* 'family', (genitive) *lautun* or *lautn*; *puia* 'wife', (genitive) *puian*.

§26. Dative KA

Dravidian: The Proto-Dravidian dative has been reconstructed as **-(k)ku* (cf. Zvelebil 1977:31). For Proto-Elamo-Dravidian, McAlpin reconstructs an adessive ending **-əkkə*, which develops into the dative in Dravidian.

Kartvelian: In Svan, there is a nominal postposition *-ka* with the meaning 'out, through', also found in the compound *-xānka* with the meaning 'out of'. When used as a verb prefix, *ka* indicates outward direction. There may have been a semantic shift from 'direction to or towards' to 'direction out from or away from'.

§27. Locative M, and §28. Locative BH

In my joint monograph with John C. Kerns (1994:218—219, #23), I reconstruct Proto-Nostratic **bi* ~ **be* 'in addition to, with, together with' on the basis of the Indo-European material discussed below plus Afroasiatic **ba* ~ **bi* 'in, with, within, among' and Sumerian *bi* 'with, together with, in addition to'. In Sumerian, this stem is also used as a conjunction: *-bi*, *bi-da*, *-bi-(da)* (literally, 'with its...') "...used in the sense 'and' with nouns and without the disjunctive force of *ù*" (quote from Thomsen 1984:84). Perhaps Etruscan *pi* 'at, in, through' belongs here as well.

Indo-European: I believe that two separate stems are involved in Indo-European, namely, (1) **me-/*mo-* and (2) **bhi-*, just as Greenberg indicates. Pinning down the exact meaning of each is not easy, however. In Germanic, the primary meaning of the derivatives of the first stem is 'with, among': Gothic *miþ* 'with, among'; Old English *mid*, *miþ* 'together with, with, among'; Middle High German *mite*, *mit* 'with, by, together'; Old Icelandic *með* 'with, along with, together with'. Greek μετά means '(with gen.) in the midst of, among; (with dat.)

among, in the company of; (with acc.) into the middle of, coming among'. The original meaning seems to have had to do with 'accompaniment, conjoinment', that is, 'with, along with, together with', as in Old Icelandic. In other words, a stem is involved that is more instrumental or comitative in meaning than locative, at least in Indo-European. As Greenberg notes, the use of this stem as an inflectional ending is restricted to Germanic, Slavic, and Baltic. As Greenberg points out in §28, the stem **bhi-* also exists as an independent stem in Germanic: Gothic *bi* 'about, over; concerning, according to; at'; Old English *be, bi*; *bī* (preposition, with dat., indicating place and motion) 'by (nearness), along, in'; Old High German *bi-*; *bī* adverb indicating nearness, preposition meaning (with dat.) '(near) by, at, with', as adverb 'from now on [von jetzt an]'. The original meaning, based upon the Germanic evidence, seems to have had to do with 'proximity, nearness', either of place '(near) by, at' or time 'now, at the present time'. There is a compound in Sanskrit, namely, *abhí* (either < *e-/o- + *bhi-* or *m̥- + *bhi-*), whose primary meaning is 'moving or going towards, approaching' — as an independent adverb or preposition, it means (with acc.) 'to, towards, in the direction of, against, into'; as a prefix, it means 'to, towards, into, over, upon'. Another compound is found in Greek ἀμφί (*m̥- + *bhi-*), preposition used with the genitive, dative, and accusative with the basic meaning 'on both sides', as opposed to περί, whose basic meaning is 'all around' — (with gen., causal) 'about, for, for the sake of', (of place) 'about, around'; (with dat., of place) 'on both sides of, about'; (with acc., of place) 'about, around'; (as independent adverb) 'on both sides, about, around'. This compound is also found in the Latin inseparable prefix *amb-*, *ambi-*, meaning 'on both sides; around, round about'. Further relationship to words meaning 'both' is usually assumed, though uncertain. When we look at the use of *-*bhi-* as a case ending, we find a slightly different semantic range than what is indicated by the above evidence. I think it is significant that it is specifically this ending that shows up in the instrumental singular in Greek and Armenian. This seems to indicate that the original meaning was similar to *-*me-*/**mo-*, that is, 'with, along with, together with'. Indeed the choice between *-*me-*/ *-*mo-* as a case ending in Germanic, Baltic, and Slavic, on the one hand, and *-*bhi-* as a case ending in Italic, Indo-Iranian, Greek, and Armenian, on the other, seems to indicate that they were close, if not identical, in meaning. Considering this, it appears to me that the Germanic meanings are secondary. Thus, we can reconstruct two separate stems for Proto-Indo-European, the first of which, **me-*/**mo-*, meant 'with, along with, together with', the second of which, **bhi-*, meant (on the basis of its use in case endings) 'in, with, within, among'. The evidence from Afroasiatic and Sumerian mentioned above reinforces the interpretation that the original meaning of Proto-Indo-European **bhi-* was 'in, with, within, among'.

Sumerian: I did not reconstruct a Proto-Nostratic ancestor for Proto-Indo-European **me-*/**mo-* in my 1994 joint monograph — perhaps I should have looked more diligently. In Sumerian, for example, one finds *-m-* conjunctive prefix and *-m-da-* third person singular comitative prefix inanimate. The *-da-* in *-m-da-* is the standard Sumerian comitative element. The *-m-* may be distantly related to the Indo-European forms we have been discussing.

Etruscan: In Etruscan, we find the enclitic copula *-m* (*-um* after a consonant) 'and' (< 'together with, in addition to' as in Sumerian *-bi*, *bi-da*, *-bi-(da)* mentioned in [b] above), which may also be compared.

Elamite: Note especially the locative affix (postposition) *-ma* 'in', variant *-me* (there is also a genitive affix *-ma*, variants *-mi* and *-me*). McAlpin (1981:68, table 2.1) lists the Elamite postposition *-ma* 'in, on; according to', used with things and time units and indicating location inherent in place names. I can find nothing comparable in Dravidian.

Afroasiatic: In Egyptian, we find *m* (preposition, with suffixes) 'in; with, by means of; from, out of; as, namely'. Note Gardiner (1957:124—125, §162): "...*m*, before suffixes...*ỉm·*, indicates *position* generally, the main lines of development being 'in', 'from', and the instrumental 'with'." Also worth noting are the following forms from Semitic: Ugaritic *'m* (= *'amma* ?) 'with, to', also *'mn*; Hebrew *'im(m-)* 'with, together with'; Syriac *'am* 'with'; Aramaic *'im(m-)* 'with'; Arabic *ma'a* 'with, together with, accompanied by, in the company of', *ma'an* 'together, at the same time, simultaneously'.

Given all of the considerations discussed above, I would now reconstruct a Proto-Nostratic stem **ma-* ~ **mə-* — as in Egyptian, it was used to indicate position and had a similar range of meanings, that is, 'in; from; with'. I propose that it was this stem that was the source of the locative forms Greenberg discusses. In Indo-European (and Etruscan), the instrumental/comitative sense prevailed, while elsewhere in Eurasiatic, the locative sense was emphasized.

§29. Locative RU

Sumerian: In addition to the common form *-ni-*, Sumerian also has a locative prefix *-ri-* (cf. Thomsen 1984:234). This may be compared with the forms Greenberg lists.

§30. Locative N

Sumerian: Note the locative prefix *-ni-*.

Dravidian: As noted by Zvelebil (1977:32, §1.1.3.5.6): "**-in/*-il* may probably be reconstructed as the underlying shape of a number of related forms which are markers of a locative function". The first member of the pair, namely, **-in*, may be compared with the locative forms in *-n-* found in Eurasiatic.

Afroasiatic: In Highland East Cushitic, we find the following: In Darasa, the ablative-locative ('from, in, at') suffix is *-'ni*, and the instrumental suffix is *-nni*, while in Hadiyya and Kambata the locative-instrumental suffix is *-n*. In Sidamo, on the other hand, there is a multipurpose postposition *-nni* with the meanings 'from, at, on, by, with'. In Omotic, there is

a widespread instrumental-locative-directional marker *-nV* (cf. Zaborski 1990:626—627). Zaborski notes that some of the forms may be borrowed from Highland East Cushitic.

§31. Locative I

Sumerian: In Sumerian, there is a locative-terminative postposition *-e*, which is only used with inanimate beings. The locative-terminative is used to indicate the direction 'near to' or 'near by'. As an adverb, *e* simply means 'here'. I suspect that this may be related in some way to the locative *-i* Greenberg is discussing.

Etruscan: In Etruscan, the locative ending is *-θi*. I regard this as a hypercharacterized form in which the locative ending *-i* has been added to a locative *-θ* (< the comitative-locative ending **-da* discussed in the following comment).

§32. Locative TA

On p. 155, Greenberg discusses the Indo-European suffixes **-dhe* and **-dhe* found in adverbs of place. I believe that this is to be compared with the Sumerian comitative element *da* (also *-dè*). As noted by Thomsen (1984:99): "The basic meaning of the comitative is 'with', 'together with', expressing accompaniment as well as mutual action." A comitative-locative particle **da* ~ **də* with the basic meaning 'along with, together with, in addition to; in, at', shows up all over Nostratic (cf. Bomhard—Kerns 1994:275—276, #89). It appears in Kartvelian as a conjunction: Georgian *da* 'and', Mingrelian *do* 'and', Zan *do* 'and' < Proto-Kartvelian **da* 'and', and probably as the adverbial case ending *-ad/d* found, for example, in Old Georgian (in Modern Georgian, the ending is *-ad[a]*). In Afroasiatic, it is found in Chadic: Hausa *dà* 'with; and; by, by means of; regarding, with respect to, in relation to; at, in, during; than'; Kulere *tu*; Bade *də*; Tera *ndə*; Gidar *di*; Mokulu *ti*; Kanakuru *də* < Proto-Chadic **də* 'with, and'. It may also survive in Highland East Cushitic: note the Burji locative suffix *-ddi*. Elamite has *da* 'also, too, as well, likewise; so, therefore, consequently, accordingly, hence; thereby, thereupon'. Particularly interesting is Altaic, where this particle functions as a locative suffix on the one hand, **-da*, and as an independent particle on the other, **da* 'together with, and, also': Common Mongolian dative-locative suffix **-da* > Mongolian *-da*; Dagur *-da*; Khalkha *-dɒ*; Buriat *-da*; Kalmyk *-dɒ* (cf. Poppe 1955:195—199). In Manchu, the dative-locative particle is *-de*. In Turkic, it also appears as a locative suffix: Common Turkic **-da/*-dä* (cf. Menges 1968:110). It is preserved in Indo-European in the suffixed particle appearing, for example, in Sanskrit as *-ha* and *-dhi*: *sa-há* 'with' (Vedic *sa-dha*), *i-há* 'here' (Prakrit *i-dha*), *kú-ha* 'where?', *á-dhi* 'above, over, from, in'; in Avestan in *ika* 'here', *kudā* 'where?'; and in Greek in the locative particle -θι in, for example, οἴκο-θι 'at home', πό-θι 'where?'. I would equate the forms Greenberg lists with the widespread Proto-Nostratic comitative-locative element **da* ~ **də* discussed here and would, therefore, derive them from Proto-Eurasiatic **da* instead of *TA*. Thus, I suggest that it would have been better to have written "§32. Locative DH." This is a case where material from the non-Eurasiatic Nostratic languages can help explain developments in Eurasiatic.

Dravidian: The Proto-Nostratic locative element **da* ~ **də* may also be found in the Proto-Dravidian sociative (comitative) ending **-ŏṭu*. Particularly noteworthy are the Tuḷu locative endings *-ḍu* ~ *ṭu*, *-ḍi* ~ *ṭi*, which may, perhaps, be compared with the Tamil locative postposition *-iṭai* (Proto-Dravidian medial *-ṭ-* < Proto-Nostratic **-d-*; cf. Bomhard—Kerns 1994:125).

Etruscan: As noted above, in Etruscan, the locative ending is *-θi*. I regard this as a hypercharacterized form in which the locative ending *-i* has been added to a locative ending *-θ* (< the comitative-locative ending **-da* [there is no voicing contrast in stops in Etruscan]). The Etruscan form particularly reminds me of the Greek locative particle -θι.

§33. Ablative TA

This ending is widespread in other Nostratic languages. The Sumerian ablative-instrumental case ending is (inanimate) *-ta*, (prefix chain) *-ta-*, and this agrees with the Proto-Uralic ablative ending **-ta* in both form and function as well as with the Proto-Elamo-Dravidian oblique/locative ending **-tə*. Also worth noting is the Old Georgian instrumental ending *-it(a)/-jt(a)*, which may ultimately come from the same source.

§34. Comitative KO-N ~ KO-M

In my co-authored book (Bomhard—Kerns 1994:414—415, #256), I reconstruct a Proto-Nostratic stem **kʰam-* ~ **kʰəm-* 'to gather together, to collect; together, together with' on the basis of Proto-Indo-European **kʰem-/*kʰom-/*kʰm̥-* 'to gather together', **kʰom-* 'together with'; Afroasiatic: Semitic: Akkadian *kamāsu* 'to gather, to collect, to bring in (barley, persons, animals, objects, or documents)'; Proto-Altaic **kam-* 'to accumulate, to collect, to gather together' (cf. Mongolian *qamtu* 'together, along with; jointly, simultaneously', *qamu* 'to gather together; to sweep together, to scrape up, to rake up', etc.). I suggest that Proto-Nostratic **kʰam-* ~ **kʰəm-* 'to gather together, to collect; together, together with' is the source of the forms Greenberg is discussing.

§39. Nominalizer M

Elamo-Dravidian: McAlpin (1981:107, §511) reconstructs a Proto-Elamo-Dravidian **-maį̂* (> Proto-Elamite **-may* [> *-me*], Proto-Dravidian **-may*), which "is used to derive abstract nouns from other nouns and occasionally from verbs".

Kartvelian: In Georgian, an *m*-prefix is used in various prefix + suffix combinations to form active participles; these include the following: *m-...-ar* (also *m-...-al*), *m-...-el*, *ma-...-el*, *me-...-ar*, *mo-... -ar* (also *mo-...-al*), *mo-...-e* (for a complete list of Old Georgian active

participles formed with *m*-prefixes, cf. Fähnrich 1994:76—77; for Modern Georgian, cf. Fähnrich 1993:66—67 and Vogt 1971:249—250). Some examples are: **m-*sm*-el-*i*** 'drinker' (*v-svam* 'I drink'), **me-*om*-ar-*i*** 'warrior' (*v-om-ob* 'I wage war'), **m-*c'er*-al-*i*** 'author, writer' (*v-c'er* 'I write'), etc. Other *m*-prefix + suffix combinations figure in nominal derivation as well. This may be an example of where Georgian is using as a prefix what appears as a suffix elsewhere. This is not unusual. It seems that Kartvelian underwent several syntactic shifts in its prehistoric development (possibly SOV > SVO and then back to SOV, each change leaving a trace in the surface morphology of the daughter languages), no doubt due to prolonged contact with North Caucasian and (perhaps) one or more unknown other languages. Thus, I believe that these Georgian *m*-prefix + suffix forms are comparable to the forms Greenberg is discussing. Similar verbal substantives with *m(V)*-prefix are common in other Kartvelian languages: cf. Svan *me-sgwre* 'sitting; servant' (*li-sgwre* 'to sit'), *me-sed* 'one who remains' (*li-sed* 'to remain'), *me-γrāl* 'singer' (*li-γrāl* 'to sing'), etc.

Afroasiatic: In Semitic, prefix *m-* figures prominently in nominal derivation. For example, in Arabic, one use of prefix *m-* is to form passive participles from simple verb stems (for all of Semitic, cf. Moscati 1964:157—158). Note also, for example, forms such as Hebrew *ma-mlāχāh* 'kingdom, dominion' from the root *mlk* 'to rule, to be king'). Prefix *m-* forms are found in Egyptian as well (cf. *m-sdm-t* 'cosmetics' from the root *sdm* 'to adorn, to paint [the eyes]'). These forms also belong with the material Greenberg is discussing. As in Kartvelian, I believe that Afroasiatic also underwent several syntactic shifts in its prehistoric development. Surely, the VSO pattern found in Semitic, Egyptian, and Berber is an innovation. While it is not possible to trace the exact developments, I believe that the original pattern was SOV, which is what is found in the majority of Cushitic languages. One little aside: The more I look at the matter, the more I am convinced that, within Afroasiatic, Semitic is the odd man out. In view of this, notions of what Proto-Afroasiatic might have been like, based primarily upon the Semitic model, are likely to be false.

§40. Possessive L

Kartvelian: In Hittite (Indo-European), one of the primary functions of the suffix *-li-* is to form adjectives indicating nationality (cf. Kronasser 1966:211—214); examples include: *Ḫurrili-* 'Hurrian', *Ḫattili-* 'Hattic', *Palaumnili-* 'Palaic', *Luwili-* 'Luwian', *Nāšili-* and *Nešumnili-* 'Hittite (?)', etc. In Georgian, there is a suffix *-el-* which is used in the same way, that is, to form adjectives of nationality designating human beings; examples are: *kartveli* and *kartuli* 'Georgian', *megreli* and *megruli* 'Mingrelian', *ingliseli* 'English', *čineli* 'Chinese', etc. This same suffix is used to derive adjectives designating human beings from common nouns: *kalakeli* 'citizen, city-person' (< *kalaki* 'city'), *sopleli* 'peasant, country-person' (< *sopeli* 'village'), etc. The fundamental meaning of the Georgian *-el-* suffix appears to be similar to what Greenberg posits for Indo-European, namely, 'pertaining to' or 'belonging to'.

Etruscan: In Etruscan, personal names often have a genitive ending *-al*: cf. *aule velimna larθal clan* (= *aule velimna larθalisa*) 'Aulus Velimna, son of Larth' (*larθalisa* is a

patronymic form in which the ending *-isa* replaces *clan*). The general scheme may be represented as follows:

Nominative	Genitive	Patronymic
larθ	*larθal*	*larθalisa*
arnθ	*arnθal*	*arnθalisa*
laris	*larisal*	*larisalisa*

We can venture a guess that the original meaning of *-al* was 'belonging to', so that *larθal* would have originally meant 'belonging to Larth'. The patronymic can be seen as a hypercharacterized form in which the genitive ending *-isa* was added to the ending *-al*. The ending *-la* could be added again to the patronymic to indicate the grandfather: cf. *larθalisla* in the phrase *arnθ velimna aules clan larθalisla*, where Larth is the father of Aule and, therefore, the grandfather of Arnth. Interestingly, in this example, *aules* contains the genitive ending *-s*. Thus, we can render this loosely as 'Arnth Velimna, son of Aule, belonging to Larth' or, in better English, 'Arnth Velimna, son of Aule, whose father was Larth'.

§41. Adverbial Participle P

It appears that the original form was **ba* and not **P*, though this creates problems with the Turkish data, which point to **pa* instead. That the Eurasiatic stem as **ba* instead of **pa* seems particularly likely, however, in view of the fact that Greenberg derives the Anatolian forms from an Indo-European particle that Pokorny reconstructs as **bhĕ*, **bhŏ*. Note also the consistent single writing in Hittite, which points to a voiced stop, according to "Sturtevant's Law". The evidence from Mongolian also points to original **ba*. The material from Uralic is phonologically ambiguous.

Indo-European: The Indo-European forms Greenberg cites from Gothic and Old Church Slavic correspond very well with the Mongolian conjunction *ba* 'and, also'. (On Gothic *ba*, cf. Lehmann 1986:55. On the same page, Lehmann lists a Gothic adverbial suffix *-ba* and illustrates its use with an example, namely, *baitraba* 'bitterly'. He remarks: "Isolated, both in Gmc and the IE languages; origin obscure".) In Mongolian, "There are modal adverbs with the meaning 'completely', derived by reduplication of the first syllable of the word with the inserted consonant *-b*. If the first syllable of the word concerned is *no*, the adverb is *nob*; if the first syllable is *qa*, the adverb is *qab*, and so on" (quote from Poppe 1974:59—60, §218). The Gothic and Mongolian forms may thus be related.

Altaic: The Classical Mongolian conditional gerund *-basu* (also *-besü* and *-ubasu/-ubesü* after *b* and *r*; Modern Mongolian has *-bala/-bele*) is used to indicate an act which is the necessary condition of the following action coming into effect (as Greenberg notes, *-basu* is made up of the past converb [i.e. adverbial participle] *-ba-* plus *a-su* 'would be'; the suffixes used to indicate past tense are *-ba/-be* and *-bai/-bei*, as in *ögbe* or *ögbei* 'he gave', *odba* or *odbai* 'he

went, he departed' — for details, cf. Poppe 1974:164—165, §§588—589). Constructions using the conditional gerund are usually translated with 'when, if', as 'when this happens, then that', 'if this happens, then that', so that there is an implied temporal relationship as well as an implied cause and effect relationship. Thus, this construction could easily develop into a causative, as Greenberg notes.

Kartvelian: In Georgian, the causative of intransitive verbs is built by means of the character vowel *-a-* and the suffix *-eb* (cf. Fähnrich 1993:139—140). I suspect that the Mongolian and Kartvelian formations may be related in some way.

Dravidian: Also note the Proto-Dravidian causative suffix reconstructed by McAlpin (1981:45—46) as **-pi*.

On the basis of what has been discussed above, I think we are justified in setting up a Proto-Nostratic particle **ba ~ *bə* meaning 'then, therefore', just as Greenberg suggests. This particle was inherited by Eurasiatic. **ba ~ *bə* could be used with verbs to indicate a conditional relationship, but without necessarily any reference to time, that is to say that the actions could be either simultaneous or successive, thus: 'when this happens, then that happens (at the same time)', 'when this happens, then that comes about'. This is basically the situation found in Turkish. The next stage is found in Mongolian, where there is an implied temporal relationship as well as an implied cause and effect relationship. The implied cause and effect relationship develops into causatives in Kartvelian and Dravidian.

§42. Participle N

Etruscan: We may also bring in the Etruscan present participles ending in *-an*: *turan* 'giving', *mulvan* 'founding', etc.

Elamite: As noted by McAlpin (1981:79—80): "Verbals in Middle Elamite consist of two participles, one in *-n* and one in *-k*... The participle in *-n* is 'active,' which seems to be nonpast and progressive." Note also Grillot-Susini (1987:34): "The participle in *-n* represents a passive or an intransitive of unaccomplished-durative aspect (present-future tense, durative)..."

§43. Passive Participle T

Etruscan: Here, we find active past participles ending in *-θas*, as in *avil svalθas LXXXII* 'having lived eighty-two years'.

§44. Participle NT

Indo-European: The idea that the Indo-European third person plural ending **-nti* of the present tense is to be derived from the participle **-nt* is not new. Oswald Szemerényi and Thomas Burrow proposed a similar theory. In my 1988 article on "The Prehistoric Development of the Athematic Verbal Endings in Proto-Indo-European" (1988:475—488), I accepted the views of Szemerényi and Burrow. However, I have since proposed a new explanation (1996:76). Basically, I see the incorporation of the third person ending **-t* into the conjugational system in Proto-Indo-European as an innovation, which, nevertheless, must have taken place at an early date since it is found in Anatolian as well as later stage daughter languages. I believe that the third plural was indicated by the ending **-n* at the time that **-t* was added and that, with the addition of the **-t*, a new third plural ending was created, namely, **-nt*. At a later date, this was further extended by a deictic **-i* to form so-called "primary" endings. Thus, while the new third plural ending **-nt* was identical in form with the participles ending in **-nt*, I believe that, ultimately, they had a different origin. Note that there may be evidence from the Indo-European daughter languages for an unextended third plural ending *-n*: cf., for example, the so-called "secondary" third plural forms in Sanskrit *ábharan*, Avestan *barən*, and Greek ἔφερον. These are usually interpreted as being derived from **-nt* through loss of the final *-t*. But, could they not be simply relics of an earlier unextended **-n* instead? Quite honestly, it is probably impossible to tell whether or not this suggestion has any validity given that regular phonological developments in each of these daughter languages can also account for loss of final *-t* rather nicely.

§45. Gerundive-Participle L

Dravidian: Caldwell (1913:543) describes a group of verbal nouns ending in *-al* (or *-dal*) in Tamil. Unfortunately, he does not give an in-depth explanation of the uses of this ending. He does mention, however, that "[i]t is remarkable that *l* or *al* is used also in Mongolian as a formative of verbal nouns..." McAlpin (1981:52) also mentions this ending: "It is possible that the ending **-al* on the verb stem could be Proto-Dravidian in origin; see Andronov, 1979, p. 69." And that is all he says! In his descriptive grammar of Tamil (1982:20, §1.1.2.2.1), R. E. Asher gives a little more information:

> The most usual marker of a noun clause is a nominalized verb form. In the formal variety of the language, these nominalized forms fall into two types: (i) nominalized forms marked for tense. The most common — one found for all verbs — is one consisting of verb stem + *(t)tal*, e.g. *varutal* 'the coming', *koṭuttal* 'the giving'...

Obviously, the ending *-(t)tal* described by Asher has been built by adding *-al* to *-(t)t-*. The Dravidian verbal nouns ending in *-al* should be included with the forms Greenberg is discussing.

Kartvelian: In a long section on Georgian participles, Vogt (1971:246—254) devotes considerable attention to perfect passive participles (he uses the term [p. 247] "participes passés passifs") in *-ul-/-il-* (see also Fähnrich 1993:67—69, and, for Old Georgian, Fähnrich 1994:77): *c'er-il-i* 'written', *k'r-ul-i* 'tied, bound', etc. Note also the noun *c'er-ili* 'letter' (that is, 'that which has been written').

§47. Imperative KA

Afroasiatic: I was immediately struck by the resemblance of the forms Greenberg is discussing with the widespread second person personal pronoun stem **kV-* found in Afroasiatic. In Semitic, this stem appears as the second person singular and plural personal pronoun suffix (table taken from Moscati 1964:106, §13.14):

	Akkadian	Ugaritic	Hebrew	Syriac	Arabic	Geez
m.sg.	*-ka*	*-k*	*-k*	*-k*	*-ka*	*-ka*
f.sg.	*-ki*	*-k*	*-k*	*-k*	*-ki*	*-ki*
m.pl.	*-kunu*	*-km*	*-kem*	*-kōn*	*-kum(u)*	*-kəmmū*
f.pl.	*-kina*	*-kn*	*-ken*	*-kēn*	*-kunna*	*-kən*
dual		*-km*			*-kumā*	

In Akkadian, this stem is also found in the genitive/accusative and dative second person singular and plural independent pronouns: (m. sg. gen./acc.) *kāti/a*, (f. sg. gen./ acc.) *kāti*, (m. pl. gen./acc.) *kunūti*, (f. pl. gen./acc.) [*kināti*]; (m. sg. dat.) *kāšim*, (f. sg. dat.) *kāši(m)*, (m. pl. dative) *kunūši(m)*, (f. pl. dat.) [*kināši(m)*]. In Egyptian, the second person singular masculine suffix pronoun is *k* 'thou, thy, thee', while it appears as *k-* and *-k* in Coptic. Also, we find the following in East Cushitic: Proto-East Cushitic (m.) **ku*, (f.) **ki* second person singular personal pronoun (object) 'thee' > Saho *ku*, Afar *ko-o*, Burji *šee*, Somali *ku*, Rendille *ki*, Boni *ku*, Dasenech *kuu-ni* 'thou', *ko* 'thee', Oromo *si*, Konso *ke*, Gidole *he(ɗe)*, Sidamo *hee*, Hadiyya *kee-s*, Dullay *ho-* ~ *he-*. In Southern Cushitic, the following forms occur: Proto-Southern Cushitic **ki* second person singular feminine personal pronoun 'your' > Iraqw *ki*, *kiŋ* 'you' (f. sg.), *-k* in *-ok* 'your'; Burunge *igi* 'you' (f. sg.), *-g* in *-og* 'your'; Alagwa *ki* 'you' (f. sg.), *-k* in *-ok* 'your'. Proto-Southern Cushitic **ku* second person singular masculine personal pronoun 'your' > Iraqw *ku*, *kuŋ* 'you' (m. sg.), *ku-* in *kunga* 'you' (pl.), *-k* in *-ok* 'your'; Burunge *ugu* 'you' (m. sg.), *-g* in *-og* 'your'; Alagwa *ku* 'you' (m. sg.), *ku-* in *kungura* 'you' (pl.), *-k* in *-ok* 'your', K'wadza *-ku*, Asa *-ku*, Dahalo *-ku*.

§48. Hortatory L

Elamite: In Old Elamite, there is a precative-hortative marker *-li* (cf. McAlpin 1981:80—81, §242.443). Grillot-Susini (1987:40), however, considers *-li* to be "an ancient or dialectal form [used to] mark the optative". Achaemenid Elamite uses *-ni* in the same function.

Afroasiatic: A precative *l-* occurs in Semitic (cf. Moscati 1964:144: "*l-*, which occurs in Talmūdic Aramaic *lehĕwē* 'he is', may be considered a remnant of precative *l*").

§50. Causative S

Afroasiatic: There are various causative prefixes in Semitic, the most common of which is *š-*, which is found in Akkadian, Ugaritic, and South Arabian (except Sabaean): cf. Akkadian *ušamqit* 'he caused to fall', from *maqātu* 'to fall down, to collapse; to fall, to fall to the ground'. A similar formation, with prefix *s-*, is found in Egyptian: *s-sḏm* 'to cause to hear', from *sḏm* 'to hear', *s-nfr* 'to make beautiful', *s-ḫr* 'to cause to fall', etc. The same goes for Berber: cf. Tamazight *ssərwəl* 'to cause to flee, to rout', from *rwəl* 'to run, to flee'. In several Afroasiatic languages (such as East Cushitic and Hausa, for example), causatives are formed with a suffix *-s*: cf. Burji *gat-is-* 'to cause to sell', from *gat-* 'to sell', etc. Causatives in *-s* (or extended forms) are also found in Omotic: cf. the Aari causative suffix *-sis-* in *wur-sis-* 'to cause to hear', from *wur-* 'to hear', or the Dime causative suffix *-s-* in *wuy-s-u* 'cause to stand!, stop!', from *wuy* 'stand!'. Clearly, these formations are related to the ones that Greenberg is describing.

§56. Negative N

Negative/prohibitive *N* occurs throughout Nostratic (cf. Bomhard—Kerns 1994:681—682, no. 562).

Kartvelian: Proto-Kartvelian **nu* 'no, not' (prohibitive particle) > Georgian *nu* 'no, not'; Mingrelian *nu* 'no, not'; Svan [*no*]. Proto-Kartvelian **numa* 'no, not' (prohibitive particle) > Mingrelian *numu, nəmə* 'no, not'; Svan *nōma, nōm-* 'no, not'.

Afroasiatic: Egyptian *n, nn, nꜣ, ny, nw* 'not'.

Sumerian: Note the following: *na* 'not', *na-* prohibitive prefix, *nu* 'not', *nu-* negative prefix.

Elamite: To these, we should add Elamite *in-*, element of negation, *inni*, negative particle, and *ani*, prohibitive particle.

§57. Negative M

Negative/prohibitive *M* is also widespread in Nostratic (cf. Bomhard—Kerns 1994:644, no. 523).

Kartvelian: Svan (particle of modal negation) *mād* 'no, not', *mām(a)* 'not', *māma* 'no'; Laz *mo(t)* verbal prohibitive particle.

Afroasiatic: Proto-Semitic **ma(ʔ)* negative/prohibitive particle > Arabic *mā* 'not'; Harari *mēʔ* 'not'. Egyptian *m* prohibitive particle: 'do not'. Proto-East Cushitic **ma(ʔ)* negative particle > Afar *ma*; Somali *maʔ* (Central Somali *mə* main sentence negative particle); Rendille *ma-* negative prefix; Dasenech *ma*.

§58. Negative E/ELE

In my joint monograph, I set up a Proto-Nostratic **ʔal-* ~ **ʔəl-*, element of negation, which, in addition to serving as a negative particle, is also used to form negative auxiliary verbs in Uralic and Dravidian (cf. Bomhard—Kerns 1994:580—581, no. 449).

Indo-European: Hittite *li-e* element used with the present indicative to express a negative command.

Afroasiatic: Proto-Semitic **ʔal-*/**ʔul-* (< **ʔəl-*) element of negation > Akkadian *ūl* 'not'; Ugaritic *ảl* 'not'; Hebrew *ʔal* (negative particle) 'certainly not', (with verb) 'not'; Phoenician *ʔl* element of negation; Arabic *lā* (negative particle) 'not', (with apoc. expressing negative imptv.) 'no!'; Sabaean *ʔl* (negative particle) 'not, no one'; Ḥarsūsi *ʔel* 'not'; Jibbāli *ʔɔl* 'not'; Mehri *ʔəl* 'not'; Geez *ʔal-* element of negation; Tigre *ʔalä-* in *ʔalä-bu* 'there is not'; Amharic *al-* used to express a negative verb in the perfect. Berber: Kabyle *ala* 'no'.

Dravidian: Proto-Dravidian **al-* 'to be not so-and-so' > Tamil *al-* 'to be not so-and-so'; Malayalam *alla* 'is not that, is not thus'; Kolami *ala·* 'to be not so-and-so'; Kannaḍa *alla* 'to be not so-and-so, to be not fit or proper'; Koḍagu *alla* 'to be not so-and-so'; Malto *-l-* negative morpheme; Brahui *all-* base of past negative tenses of *anning* 'to be', *ala, alavā* 'certainly not, not a bit of it'.

Sumerian: *li* negative particle: 'not, un-'.

§60. Interrogative K

In my co-authored monograph (Bomhard—Kerns 1994:478—479, no. 324), I set up two separate stems, one of which is relative, the other interrogative: Proto-Nostratic **k*^{wh}*i-* ~ **k*^{wh}*e-* relative pronoun stem, **k*^{wh}*a-* ~ **k*^{wh}*ə-* interrogative pronoun stem.

Afroasiatic: The interrogative stem *$k^{wh}a$- ~ *$k^{wh}ə$- is preserved in relic forms in several Semitic languages. Proto-Semitic *_ka-m_ 'how much?, how many?' > Arabic _kam_ 'how much?, how many'; Ḥarsūsi _kem_ 'how much?, how many?'; Mehri _kəm_ 'how much?'; Soqoṭri _kəm_ 'how much?'.

§61. Interrogative J

This stem is one of the strongest Nostratic etymologies. The data supporting this etymology are extremely rich, and derivatives are found in every branch of Nostratic. Rather than list all of the data, I will only give a summary here. Those interested in the details should consult my joint monograph (Bomhard—Kerns 1994:594—595, no. 467).

> Proto-Nostratic *_ʔay-_, *_ʔya-_ interrogative and relative pronoun stem > Proto-Indo-European *_ʔyo-_ relative pronoun stem; Kartvelian: Svan (interrogative) _jär_ 'who?', (relative) _jerwäj_ 'who', (indefinite) _jer_ 'somebody, something', _jerē_ 'someone, somebody', _jerwāle_ 'anybody'; Proto-Afroasiatic *_ʔay(y)-_ inter-rogative pronoun stem; Proto-Finno-Ugrian *_yo-_ 'who, which'; Proto-Dravidian *_yā-_ interrogative stem; Proto-Altaic *_yā-_ interrogative stem: 'who?, which?, what?'.

In my co-authored monograph, I further assume that this stem serves as the basis for an interrogative verb stem meaning 'to do what?, to act in what manner?' (Bomhard—Kerns 1994:595—596, no. 468):

Indo-European: Proto-Indo-European *_ʔyo-_ originally an interrogative verb stem meaning 'to do what?, to act in what manner?', later simply 'to do, to make, to perform' > Proto-Anatolian *_iya-_ ~ *_aya-_ ~ *_ya-/*yē-_ (< *_HyeH-_) 'to do, to make, to perform, etc.' > Hittite (3rd sg. pres. active) _i-ya-(az-)zi_, _i-e-iz-zi_ 'to do, to make, to treat, to beget, to perform (duty, ritual), to celebrate (deity, feast)'; Luwian (3rd sg. pres. passive) _a-a-ya-ri_ 'to make'; Hieroglyphic Luwian _a(i)a-_ 'to make'; Lycian (3rd sg. pres.) _ati_ (< *_ayati_) 'to make'; Lydian _i-_ 'to make'.

Dravidian (?): Proto-Dravidian *_iya-_ 'to do, to effect, to cause, to induce, to cause to act; to be possible, to be proper' > Tamil _iyal_ 'to be possible, to befall, to be associated with; to accept, to agree to, to approach, to resemble', _iyalpu_ 'nature, proper behavior, goodness, propriety', _iyalvu_ 'nature, means of attaining', _iyarṟu_ 'to do, to effect, to cause to act; to control the movements of, to create, to compose', _iyarṟi_, _iyarṟal_ 'effort', _iyaṟkai_ 'nature, custom', _iyai_ 'to join, to connect, to adapt', _iyaipu_ 'union, harmony, appropriateness', _iyaivu_ 'union, joining together'; Malayalam _iyaluka_ 'to agree, to go fairly, to be proper', _iyal_ 'what is proper; nature, condition; strength, power', _iyarṟuka_ 'to cause, to induce', _iyappu_ 'joint, joining together', _iyaykkuka_ 'to join', _iyayuka_ 'to be agreeable, to harmonize'; Tuḷu _iyaruni_, _iyavuni_ 'to be sufficient'; Telugu _īya-konu_, _iyya-konu_ 'to consent'.

Altaic: Common Mongolian *_yaγa-_, *_yeyi-_ (< *_yayi-_), *_yeki-_ interrogative verb stem: 'to do what?, to act in what manner?' > Mongolian _yaki-_, _yeki-_, _yeyi-_, _yaγaki-_ 'how to act?, what to

do?, how to proceed?'; Dagur *yā-* 'to do what?'; Ordos *yā-*, *yā^{t}χi-* 'to do what?'; Khalkha *yā-* 'to do what', *ī-* (< **yī-* < **yeyi-*) 'to act in what manner?'; Monguor *yā-* 'to do what?'; Buriat *yā-* 'to do what?'; Kalmyk *yā-* ~ **yaγɒ-* 'to do what?'.

§62. Interrogative M

As with the stem mentioned above in my comment to §60. Interrogative K, in my co-authored monograph, I set up two separate stems, one of which is relative, the other interrogative (Bomhard—Kerns 1994:645—647, no. 524): Proto-Nostratic **mi-* ~ **me-* interrogative pronoun stem, **ma-* ~ **mə-* relative pronoun stem.

Indo-European: Proto-Indo-European **me-/*mo-* interrogative and relative pronoun stem > Cornish (conjunction) *ma*, *may* 'that'; Breton (conjunction) *ma*, *may*, Middle Breton *maz* (from *ma* + *ez*) 'that'; Tocharian B *mäksu* (a) interrogative pronoun: 'which?, who?', (b) interrogative adjective: 'which?, what?', (c) relative pronoun: 'which, who', B *mäkte* (a) interrogative pronoun: 'how?', (b) comparative: 'as', (c) causal: 'because', (d) temporal: 'as, while', (e) final: 'so, in order that', (f) manner: 'how', A *mänt*, *mät* 'how?'; Hittite *maši-* 'how much?, how many?'.

Kartvelian: Proto-Kartvelian **mi-n-* (?) interrogative pronoun: 'who?' > Georgian *vin-* 'who?'; Mingrelian *mi(n)-* 'who?'; Laz *min-* 'who?'. (The Proto-Kartvelian form has also been reconstructed **wi-n-*.) Proto-Kartvelian **ma-* 'what' > Georgian [*ma-*] 'what'; Mingrelian *mu-* 'what'; Laz *mu-* 'what'; Svan *ma(j)*, *mäj* 'what'.

Afroasiatic: Proto-Afroasiatic **ma-* ~ **mi-* interrogative and relative pronoun stem > Proto-Semitic **mă̆-* ~ **mĭ̆-* interrogative and relative pronoun stem. Egyptian *m* 'who?, what?'. Berber: Tamazight *m-ay* 'who?, what?'; Tuareg *mi* 'who'. Proto-East Cushitic **maʔ* 'what?'. Proto-East Cushitic **meʔ-* (or **meeʔ-*) 'how many?'. Proto-Highland East Cushitic **mi-ha* 'why'. Proto-Southern Cushitic **ma* 'which?'. Proto-Southern Cushitic **me* 'how many?'. Proto-Southern Cushitic *mi* 'what kind of?'. Proto-Chadic **mi*, **mə* 'what?'. The data from the Afroasiatic languages are extremely rich. Therefore, only a summary has been given here. For details, cf. Bomhard—Kerns 1994:645—647, no. 524. Note also Ehret 1995:301, no. 571 **ma*, **mi* 'what?'.

Sumerian: Note the interrogative stem **me-* found in *me-na-àm* 'when?', *me-a* 'where?', *me-šè* 'where to?'.

§64. Interrogative N

Sumerian: I cannot help wondering whether the Sumerian inanimate interrogative stem *a-na* 'what?' may be related to the forms Greenberg is discussing. On the other hand, might the Sumerian animate interrogative stem *a-ba* 'who?' be connected in some way with the Etruscan relative stem *ipa* 'who, which'?

And there is more!

References

Adams, Douglas Q.

1988 *Tocharian Historical Phonology and Morphology*. New Haven, CT: American Oriental Society.

1999 *A Dictionary of Tocharian B*. Amsterdam and Atlanta, GA: Rodopi.

Asher, R. E.

1982 *Tamil*. Amsterdam: North Holland.

Barth, Jacob

1913 *Die Pronominal-Bildung in den semitischen Sprachen [The Formation of Pronouns in the Semitic Languages]*. Reprinted 1967. Hildesheim: Georg Olms.

Bloch, Jules

1965 *Indo-Aryan from the Vedas to Modern Times*. English edition largely revised by the author and translated by Alfred Master. Paris: Adrien-Maisonneuve.

Bomhard, Allan R.

1984 *Toward Proto-Nostratic: A New Approach to the Comparison of Proto-Indo-European and Proto-Afroasiatic.* (= *Current Issues in Linguistic Theory*, vol. 27.) Amsterdam: John Benjamins.

1988 "The Prehistoric Development of the Athematic Verbal Endings in Proto-Indo-European", in Yoël L. Arbeitman (ed.), *A Linguistic Happening in Memory of Benjamin Schwartz*, pp. 475—488. Louvain-la-Neuve: Publications Linguistiques de Louvain.

1996 *Indo-European and the Nostratic Hypothesis*. Charleston, SC: SIGNUM Desktop Publishing.

Bomhard, Allan R. and John C. Kerns

1994 *The Nostratic Macrofamily: A Study in Distant Linguistic Relationship*. Berlin, New York, NY, and Amsterdam: Mouton de Gruyter

Buck, Carl Darling

1933 *Comparative Grammar of Greek and Latin*. 10th impression 1966. Chicago, IL, and London: University of Chicago Press.

Caldwell, Robert

1913 *A Comparative Grammar of the Dravidian or South Indian Family of Languages*. 3rd edition revised and edited by J. L. Wyatt and T. Ramakrishna Pillai. Reprinted 1974. New Delhi: Oriental Reprint Corporation.

Diakonoff, Igor M.

1988 *Afrasian Languages*. Moscow: Nauka.

1992 *Proto-Afrasian and Old Akkadian: A Study in Historical Phonetics.* (= *Journal of Afroasiatic Languages* 4:1/2.) Princeton, NJ: Institute of Semitic Studies.

Dolgopolsky, Aaron

1984 "On Personal Pronouns in the Nostratic Languages", in Otto Gschwantler, Károly Rédei, and Hermann Reichert (eds.), *Linguistica et Philologica. Gedenkschrift für Björn Collinder (1894—1983)*, pp. 65—112. Vienna: Wilhelm Braumüller.

Ehret, Christopher

1995 *Reconstructing Proto-Afroasiatic (Proto-Afrasian): Vowels, Tone, Consonants, and Vocabulary*. Berkeley and Los Angeles, CA: University of California Press.

Fähnrich, Heinz
1993 *Kurze Grammatik der georgischen Sprache.* Third Edition. Leipzig, Berlin, München: Langenscheidt.
1994 *Grammatik der altgeorgischen Sprache [Grammar of the Old Georgian Language].* Hamburg: Helmut Buske Verlag.

Fähnrich, Heinz and Surab Sardshweladse
1995 *Etymologisches Wörterbuch der Kartwel-Sprachen [Etymological Dictionary of the Kartvelian Languages].* Leiden: E. J. Brill.

Fleming, Harold
1990 "A Grammatical Sketch of Dime (Dim-af) of the Lower Omo", in Richard J. Hayward (ed.), *Omotic Language Studies*, pp. 494—583. London: University of London, School of Oriental and African Studies.

Gamkrelidze, Thomas V. and Vjačeslav V. Ivanov
1995 *Indo-European and the Indo-Europeans: A Reconstruction and Historical Typological Analysis of a Protolanguage and a Proto-Culture.* 2 vols. English translation by Johanna Nichols. Berlin, New York, NY, and Amsterdam: Mouton de Gruyter.

Gelb, Ignace J.
1969 *A Sequential Reconstruction of Proto-Akkadian.* Chicago, IL: University of Chicago Press.

Godel, Robert
1975 *An Introduction to the Study of Classical Armenian.* Wiesbaden: Reichert.

Greenberg, Joseph H.
2000 *Indo-European and Its Closest Relatives: The Eurasiatic Language Family.* Vol. 1, Grammar. Stanford, CA: Stanford University Press.

Grillot-Susini, Françoise
1987 *Éléments de grammaire élamite [Elements of Elamite Grammar].* Paris: Éditions Recherche sur les Civilizations.

Hayward, Richard J.
1990 "Notes on the Aari Language", in Richard J. Hayward (ed.), *Omotic Language Studies*, pp. 425—493. London: University of London, School of Oriental and African Studies.

Hayward, Richard J. (ed.)
1990 *Omotic Language Studies.* London: University of London, School of Oriental and African Studies.

Hinz, Walther and Heidemarie Koch
1987 *Elamisches Wörterbuch [Elamite Dictionary].* 2 vols. Berlin: Dietrich Reimer Verlag.

Hudson, Grover
1989 *Highland East Cushitic Dictionary.* Hamburg: Helmut Buske Verlag.

Illič-Svityč, V[ladislav] M[arkovič]
1965 "Materialy k sravnitel'nomu slovarju nostratičeskix jazykov (indoevropejskij, altajskij, ural'skij, dravidskij, kartvel'skij, semito-xamitskij)" ["Materials for a Comparative Dictionary of the Nostratic Languages (Indo-European, Altaic, Uralic, Dravidian, Kartvelian, Hamito-Semitic)"]. *Etimologija* 1965.321—373.
1971— *Opyt sravnenija nostratičeskix jazykov (semitoxamitskij, kartvel'skij, indoevropejskij, ural'skij, dravidskij, altajskij) [An Attempt at a Comparison of the Nostratic Languages (Hamito-Semitic, Kartvelian, Indo-European, Uralic, Dravidian, Altaic)].* 3 vols. Moscow: Nauka.

Khačikjan, Margaret
1998 *The Elamite Language.* Rome: Consiglio Nazionale delle Ricerche, Istituto per gli Studi Micenei ed Egeo-anatolici.

Kerns, J. Alexander and Benjamin Schwartz
1972 *A Sketch of the Indo-European Finite Verb.* Leiden: E. J. Brill.

Klimov, Georgij A.
1998 *Etymological Dictionary of the Kartvelian Languages*. Berlin and New York, NY: Mouton de Gruyter.

Kronasser, Heinz
1956 *Vergleichende Laut- und Formenlehre des Hethitischen [Comparative Phonology and Morphology of Hittite]*. Heidelberg: Carl Winter.
1966 *Etymologie der hethitischen Sprache [Etymology of the Hittite Language]*. Vol. 1. Wiesbaden: Otto Harrassowitz.

Laroche, Emmanuel
1959 *Dictionnaire de la langue louvite [Dictionary of the Luwian Language]*. Paris: Adrien-Maisonneuve.

Lehmann, Winfred P.
1952 *Proto-Indo-European Phonology*. Austin, TX: University of Texas Press.
1986 *A Gothic Etymological Dictionary*. Leiden: E. J. Brill.
1993 *Theoretical Bases of Indo-European Linguistics*. London, Boston, MA, Melbourne, and Henley: Routledge.

McAlpin, David W.
1981 *Proto-Elamo-Dravidian: The Evidence and Its Implications*. Philadelphia, PA: American Philosophical Society.

Melchert, H. Graig
1993 *Cuneiform Luvian Lexicon*. Chapel Hill, NC: The Author.
1994 *Anatolian Historical Phonology*. Amsterdam and Atlanta, GA: Editions Rodopi B.V.

Menges, Karl H.
1968 *The Turkic Languages and Peoples: An Introduction to Turkic Studies*. Wiesbaden: Otto Harrassowitz.

Moscati, Sabatino (ed.)
1964 *An Introduction to the Comparative Grammar of the Semitic Languages*. Wiesbaden: Otto Harrassowitz.

Orël, Vladimir E. and Olga V. Stolbova
1995 *Hamito-Semitic Etymological Dictionary: Materials for a Reconstruction*. Leiden: E. J. Brill.

Pfiffig, Ambros Josef
1969 *Die Etruskische Sprache [The Etruscan Language]*. Graz: Akademische Druck- und Verlaganstalt.

Pokorny, Julius
1959 *Indogermanisches etymologisches Wörterbuch [Indo-European Etymological Dictionary]*. Bern: Francke Verlag.

Poppe, Nicholas
1955 *Introduction to Mongolian Comparative Studies*. Reprinted 1987. Helsinki: Suomalais-Ugrilainen Seura.
1960 *Vergleichende Grammatik der altäischen Sprachen [Comparative Grammar of the Altaic Languages]*. Teil I: Vergleichende Lautlehre. Wiesbaden: Harrassowitz.
1974 *Grammar of Written Mongolian*. Third Printing. Wiesbaden: Harrassowitz.

Puhvel, Jaan
1984— *Hittite Etymological Dictionary*. Berlin, New York, Amsterdam: Mouton de Gruyter.

Rédei, Károly (ed.)
1986—1988 *Uralisches etymologisches Wörterbuch [Uralic Etymological Dictionary]*. Wiesbaden: Otto Harrassowitz.

Reiner, Erica
1969 "The Elamite Language" in *Altkleinasiatische Sprachen [Ancient Near Eastern Languages]*, pp. 54—118. Leiden: E. J. Brill.

Rix, Helmut
1998 *Lexikon der indogermanischen Verben [Lexicon of Indo-European Verbs]*. Weisbaden: Dr. Ludwig Reichert Verlag.

Sasse, Hans-Jürgen
1979 *The Consonant Phonemes of Proto-East Cushitic (PEC): A First Approximation.* (= *Afroasiatic Linguistics* 7/1.) Malibu, CA: Undena Publications.
1982 *An Etymological Dictionary of Burji.* Hamburg: Helmut Buske Verlag.

Schmidt, Rüdiger
1981 *Grammatik der Klassisch-Armenischen [Grammar of Classical Armenian]*. Innsbruck: Innsbrucker Beiträge zur Sprachwissenschaft.

Sihler, Andrew L.
1995 *A New Comparative Grammar of Greek and Latin.* New York, NY: Oxford University Press.

Sturtevant, Edgar H.
1942 *The Indo-Hittite Laryngeals*. Baltimore, MD: Linguistic Society of America.
1951 *A Comparative Grammar of the Hittite Language.* Vol. I. Revised edition. New Haven, CT: Yale University Press.

Thomsen, Marie-Louise
1984 *The Sumerian Language: An Introduction to its History and Grammatical Structure*. Copenhagen: Akademisk Forlag.

Tischler, Johann
1977— *Hethitisches etymologisches Glossar [Hittite Etymological Glossary]*. Innsbruck: Innsbrucker Beiträge zur Sprachwissenschaft.

Van Windekens, A. J.
1976—1982 *Le tokharien confronté avec les autres langues indo-européennes [Tocharian Compared with the Other Indo-European Languages]*. 3 vols. Louvain: Centre International de Dialectologie Générale.

Vogt, Hans
1971 *Grammaire de la langue géorgienne [Grammar of the Georgian Language]*. Oslo: Universitetsforlaget.

Walde, Alois
1927—1932 *Vergleichendes Wörterbuch der indogermanischen Sprachen [Comparative Dictionary of the Indo-European Languages]*. Revised and edited by Julius Pokorny. 3 vols. Reprinted 1973. Berlin: Walter de Gruyter.

Watkins, Calvert
1962 *Indo-European Origins of the Celtic Verb. I. The Sigmatic Aorist.* Dublin: The Dublin Institute for Advanced Studies.

Winter, Werner (ed.)
1965 *Evidence for Laryngeals*. The Hague: Mouton.

Zaborski, Andrzej
1990 "Preliminary Remarks on Case Morphemes in Omotic", in Richard J. Hayward (ed.), *Omotic Language Studies*, pp. 617—639. London: University of London, School of Oriental and African Studies.

Zvelebil, Kamil V.
1970 *Comparative Dravidian Phonology*. The Hague: Mouton.
1977 *A Sketch of Comparative Dravidian Morphology*. Part I. The Hague: Mouton.
1990 *Dravidian Linguistics: An Introduction.* Pondicherry: Pondicherry Institute of Linguistics and Culture.

Basque Parallels to Greenberg's Grammatical Evidence for Eurasiatic

Ronald W. Thornton
Otsuma Women's University, Tokyo, Japan

O. Introduction

This paper identifies eleven Basque grammatical morphemes which parallel a like number of grammatical formatives included as a part of Joseph H. Greenberg's grammatical evidence for a Eurasiatic language family (Greenberg 2000: Chapter 3). It also invites consideration of four additional formatives which Basque seems to share with Japanese at least, but which are not among of Greenberg's original seventy-two. The resulting fifteen comparisons I offer as supplemental evidence in support of a deep connection between Dene-Caucasian (including Basque) and Eurasiatic/Nostratic. The list is no doubt not exhaustive, as probably would become evident especially if Nostratic were to be examined against Greenberg's findings.

Most of the following comparisons conveniently cite examples from Japanese, which exhibits more than a few striking similarities to Basque, especially phonological and syntactic. In instances where no Japanese reflex is found by Greenberg, an Ainu or Korean example is taken from his evidence, in accordance with his tentative classification of Ainu, Japanese and Korean in a separate grouping somewhat apart from Altaic.

1. Basque parallels to Greenberg's grammatical formatives

1.1 Diminutive k (Greenberg's No. 26)

The similarity of the Basque suffix *-ko* and Proto-Indo- European **-ko* has attracted considerable attention, but that between Basque *-ko* and Japanese *ko* seems equally, if not more, compelling. Oddly, R. L. Trask, in his otherwise exhaustive survey of attempts past and present to discover a genetic link for Basque, does not mention any such attempt involving Japanese (Trask 1997: 358-429). He does, however, carefully examine the Indo-Europeanist Antonio Tovar's claim that Basque *-ko* and Proto-Indo-European **-ko* must share "some single common source" by virtue of the ancestors of Basque and PIE having been "members of an ancient European linguistic area," one which must have been extraordinary cohesive (Trask: 373). Trask contrasts the differing properties of PIE **-ko* with Basque *-ko* and describes the latter's additional functions, which depart from its principal, syntactic, function (that of deriving adjectival modifiers). One of the additional functions of *-ko*, as he points out, is to form derivatives, including diminutives, and both the Basque and IE suffixes perform this function. This, he concedes, does produce "something resembling a convergence between the Basque and IE suffixes" (Trask: 376), but he concludes that Tovar's proposal "must remain at best an implausible conjecture, at least until someone turns up more extensive evidence for an ancient *Sprachbund* involving Proto-Basque and PIE" (Trask: 376).

There should be no doubt concerning the antiquity of either Pre-Basque **-ko* or Proto-Indo-European **-ko*. Trask distances Basque *-ko* from Indo-European *-ko* on the grounds that the Basque suffix, unlike Indo-European *-ko*, "is not a derivational suffix but a syntactic element which can be added freely to any constituent of an appropriate type" (375). He points out that Basque *-ko* "is attached to adverbials, regardless of their internal structure" and that it "derives adjectival modifiers which behave quite differently from lexical adjectives" (Trask: 375). He categorizes this *-ko* as a "relational" suffix (Trask: 100): it can be added to "virtually any kind of adverbial phrase, regardless of its syntactic structure, to produce a complex adjectival modifier which can appear within a noun phrase" (Trask: 100), e.g. *guarko eguraldia* 'today's weather' (*guar* 'today').

In his discussion of Indo-European *-ko* and Basque *-ko* Trask includes the Proto-Indo-European suffix **-sko*, which he regards as "perhaps a compound suffix **-s + **-ko" (Trask: 374). It is instructive to recall that **-sko* became highly productive not only in Germanic (from **-isko*), as noted by Trask, but also as preserved in the adjectival ending *-sko* and its variants in Slavic languages as well (e.g. Polish neuter gender *polsko* 'Polish'). I contend that Proto-Indo-European **-sko* must be a compound formation of instrumental **-s* + **-ko*, as the following

discussion the Basque compound suffix *-zko* will suggest.

Basque *-zko* is formed from the suffixing of *-ko* to the instrumental suffix *-z*. Trask states that there need be no doubt about the antiquity of instrumental *-z* (Trask: 201). (See also 1.8, "instrumental *s*", below.) Suffixed to a noun phrase without the article, *-z* expresses means or instrument, e.g. *trenez* 'by train' (*tren* 'train). Adding *-ko* to *-z* produces the compound suffix *-zko,* yielding adjectival expressions such as *euskarazko liburua* 'a book in Basque' (*euskara* 'Basque language', *euskaraz* 'with Basque'). One must consider that the Basque compound adjectival-modifier ending *-zko* (borrowing the term "adjectival modifier" from Trask: 100, where it applies to *-ko*) preserves, as it were, the historical shape of a Proto-Indo-European pre-adjectival form.

Turning now to a comparison of Japanese *ko* and Basque *-ko*, we note first that Japanese *ko* has more than one syntactic function and is, additionally, an independent noun. As an independent noun it has the meaning of 'child', which, as Greenberg noted, is identical to Proto-Indo-European **ko* 'child'. Interestingly, this *ko* is a relatively unusual instance of a single-syllable Japanese noun, suggesting antiquity.

As for Basque and Japanese parallels, we observe, first, that *ko* in both languages derives diminutives. In Basque, the formation of diminutives and, rarely, augmentatives, is one of the properties of what Trask identifies as "derivational *-ko*", e.g. *mandako* 'small mule' (*mando*, 'mule'); *zatiko* 'big piece' (*zati* 'piece') respectively (Trask 1997: 376). Japanese *ko*, likewise, I believe, should be called a syntactic element (to borrow Trask's phrase), one function of which can be derivational (deriving diminutives). Japanese *ko* forms diminutives (but never augmentatives, in contrast to Basque) from nouns and, colloquially, from adjectives and verbs. It may prefix a noun, e.g. *kotori* 'small bird' (*tori* 'bird'), *koisi* 'small stone' (*isi* 'stone'), or an adjective, e.g. *kogirei* 'pretty, neat, trim, tidy' (*kirei* 'clean; pretty'). Suffixed to a female given name it imparts the additional quality of endearment. Dialectically or colloquially it can suffix to nouns, e.g. dialectal *najiko* 'little corner' (dialectal *naji* 'corner') and colloquial *sumiko* 'little corner' (standard *sumi* 'corner'). Suffixed to a verb colloquially the expression becomes emphatic, e.g. *wakarikkonai* 'you can never understand' (*wakaru* 'understand, be understandable') *wakaranai* 'don't understand'), *kamaikko nasi* 'I don't mind at all' (*nasi* 'without'). The colloquial, personal nuance of these expressions results from the diminutive-forming property of *-ko.*

A second parallel between Basque *-ko* and Japanese *-ko* is their 'locative' function. Compare the following Basque and Japanese semantically equivalent sentences:

Non dago? 'Where is he/she/it?'
Doko da? 'Where is he/she/it/they, where am I, where are you/we?'

In the Basque example, *-ko* suffixes to the (third-person singular) verb (copula) *da* (with sequential voicing of *k* to *g*), producing the lexeme *dago* 'everywhere'. In the Japanese example, by contrast, *-ko* suffixes to the pronominal interrogative morpheme *do-* 'wh-?' to derive an interrogative pronoun of location, with the verb (copula) conforming to the verb-final rule. (Basque, also a verb-final language, nevertheless allows considerable syntactic flexibility on the phrase level.) Observe, however, that Basque *-ko* can be suffixed to the interrogative as well, as in Japanese, as in *nongo* (*non* + *ko*) 'pertaining to, where from', and that moreover the singular article *-a* may additionally be attached to the above, producing a pronominal phrase, *nongoa* 'where from, native of where' (King and Elordi: 15-16).

Japanese *doko* 'where?' likewise is a pronominal, as we have noted, but Japanese *-ko*, unlike Basque *-ko*, cannot be suffixed to adverbs, nor can it derive adjectivals. Other than to the limited sphere of suffixing to female personal names to form diminutives, as we have seen, it suffixes only to the interrogative pronominal morph *do-* 'wh-?' ('where? which? how?' only) and to the declarative pronominal morphs *ko-* 'here', *so-* 'there (mesial)' and *aso-* 'there (distal)' alone. In sum, the following pronouns of location are derived with *-ko*: the interrogative *doko*, the declaratives *koko*, *soko* and *asoko*. (Compare these with the deictic forms *kotira, sotira, atira.*)

The semantic connection of *ko* as 'location' with *ko* as 'small' must go back very far in time. The concept of 'location' apparently was associated with the idea of 'small' through the notion of a narrowing in on a delimited space. The same notion of the defining property of

smallness would seem to have become operative in the adjectival-forming action of Basque relational *-ko,* in a kind of attributive, focusing action.

1.2. (Passive) Participle *t* (No. 43).

Basque forms gerunds most commonly by suffixing *-te ~ tze*, e.g. *ikuste* 'seeing', *ekartze ~ ekarte* 'carrying' (Trask: 215). Similarly, Japanese forms gerunds by suffixing the conjunctive particle *-te*, e.g. *hanasite* 'speaking'). Puzzlingly, Greenberg does not include a Japanese example of this grammatical formative, despite taking note of what seems to me to be an identical morpheme in Ainu, identified in Bronislaw Pilsudski's texts of Sakhalin Ainu as "a suffix *-te* listed as a 'participial' by [Alfred and Elzbieta Majewicz] in their concordance (1883-85: 5), for example, *an-ki-te* 'I making' ('I-make-*te*'), 1912: 12) . . ." (Greenberg: 180).

The Basque imperfective participle is formed with the suffixes *-tzen ~ -ten*; it derives, according to Trask, from the gerund by the addition of locative *-n* (Trask: 215). As a present tense it expresses either a general or a habitual act, e.g. *Zer egiten duzu?* 'What do you do?' Here, Japanese does not exhibit a similar construction.

However, again similar to Japanese, Basque forms progressives, except for a few verbs with special single-word forms, by suffixing to the verbal stem *-tzen ~ -ten* followed by a compound auxiliary composed of the item *ari* followed by a form of the be-verb, *izan*, which agrees in person and number (here: third-person singular *da*), e.g.:

Euskara ikas- ten ari da.
Basque study-*ten ari* be 3rd SG.
'He/she is learning Basque'

Let us compare the Japanese semantic equivalent. (Note that in Japanese, which does not have verbal agreement, the copula *da* is invariable; note also that, again in contrast to Basque, in which case marking is ergative, case marking in Japanese is accusative.)

Basukugo benkyô-o si-te iru.
Basque-study ACC do-*te iru*
'He is learning Basque'.

As in Basque, the Japanese progressive (continuous) form is constructed on the verb stem to which *-te* is suffixed and followed by a single auxiliary consisting of the base form of the existential verb *iru.* This construction can be called the continuative or durative: depending on the action described by the verb, it produces a stative expression, e.g., *Kanojo wa okâsan-to nitteiru* 'She looks like her mother', or a progressive one, e.g., *Kanojo wa ryôri-o siteiru* 'She is preparing the meal'. Optionally, the copula *da* may be added after the insertion of *n* (a contraction of the genitive particle *no*) to produce an affirmative variant: *Baskugo benkyô-o si-te iru-n-da.* We now have a *compound* auxiliary, similar to Basque. (The combination *no da* yields a morph expressing the idea of 'confirmed fact'.)

Modern Japanese existential *iru* refers to animates whereas existential *aru* refers to inanimates. The formation *-te iru* is not attested in Old Japanese but rather *-te ari.*[1] There seems to be a lack of consensus among Japanese language historians as to whether *iru* was existential in Old Japanese. It seems originally to have meant simply 'stop moving' and eventually 'remain standing in one place', which suggests a locative existential.

Despite the high incidence of parallelism between the Japanese and Basque gerund, in neither language does its formation appear to be very ancient. This raises the question of the

[1]Katsue Akiba-Reynolds explains why Old Japanese existential *ari* did not take the regular conclusive or "final" suffix *–u*: "The final suffix *U* seems to fit perfectly in the aspectual category which Bickerton ([1974]) calls 'nonpunctual'. It indicated durative or iterative aspect for action verbs, and it was indifferent to the past-nonpast distinction. The fact that the existential *ari* and its derivatives, which were the only stative verbs in Old Japanese, did not take the regular Final suffix *u* is also in accordance with the observation that nonpunctual aspect markers cannot normally co-occur with stative verbs" (Akiba-Reynolds: 13-14).

degree of likelihood that Japanese *-te* and Basque *-te* share a common origin. In either language its formation must long postdate any period of linguistic unity. Trask asserts that the Basque *-te* gerund "is clearly of later formation than the participle". As for its source, he presents evidence that *-te* "probably derives from a specialization of the word-forming suffix *-te*, which forms nouns of duration, like *eurite* 'rainy spell' (*euri* 'rain')". He sees *-tze* as being "probably identical with the noun-forming suffix *-tze* ~ *-tza*, which has several functions, one of which is forming nouns of abundance, as in *jendetze* ~ *jendetza* ('crowd' (*jende* 'people')". He concludes on the evidence that "the modern gerunds are all late formations obtained by adding noun-forming suffixes mostly meaning 'duration', 'abundance' or 'activity' to verb-stems . . ." (Trask: 215).

The process by which the Japanese gerund was formed appears to have been quite different, but also not to have been very ancient. As Katsue Akiba-Reynolds points out, Old Japanese had two auxiliary suffixes, *tu* and *nu*, and a negative suffix, *zu*, and that these conjugated in the same manner as main verbs (except that, curiously, some of them did not fully conjugate) (Akiba-Reynolds: 3). She concurs with certain others that the conjunctive particle *te* derives from *te*, the conjunctive form of the Old Japanese (conclusive) perfect auxiliary *tu*, regarding it as "the most plausible hypothesis in every respect." She observes that "most of the serial constructions found in Old Japanese [eighth to tenth centuries approximately] were from zero-conjunctions. . . . The serial constructions with *te* between serialized verbs are never or very rarely found in Old Japanese though they are common in modern Japanese" (Akiba-Reynolds: 12). As to why *te* became a conjunctive particle, "the change seems to have been triggered by a change in the system of tense-aspect" (Akiba-Reynolds: 13).

How then, considering their apparent differences of derivation, are we to account for the striking syntactic similarities of Basque *-te* and Japanese *-te*? The parallels cannot be fully explained by coincidence, and certainly not by borrowing. The derivation of the Basque or the Japanese gerund would seem in either language to go back to probable commonly inherited internal resources. These would seem to have provided the impetus for the formation respectively of the progressive constructions with *ari* in Basque or *ari* in Japanese. There would seem to be no doubt of the antiquity of either Basque *ari* or Old Japanese existential *ari*, on the basis of Basque and Japanese internal evidence alike. Trask notes that "[t]he item *ari* hardly has any independent existence today, but it is attested in the literature in the sense of 'busy, hard at work'". As he points out, this auxiliary can also be used without a verbal complement: *lanean ari da* 'he's working' (literally 'he's busy at work')" (Trask: 238). I cannot but consider that this could be evidence that *ari* originally or once may have been an existential verb, as suggested by its similarity to Japanese *aru*/*ari*.

1.3. First-person *n* (No. 3)

This morpheme is not represented in Japanese; however, Ainu, like Basque, has first-person *n*: compare Basque first-person singular *ni*, Ainu first-person singular object pronoun *en*. Note (as in Ainu) the presence of first-person agreement in *n(-)*: Basque *ni naiz* 'I am'.

1.4. Pronoun base *ge* (No. 7)

This morpheme is not represented in Japanese, Korean, or Ainu. However, it may be represented in Basque by the first-person plural pronoun *gu*.

1.5. Genitive *n* (No. 25)

Although Trask (Trask: 201) raises a question of the antiquity of Basque genitive *–en*, at least relative to the doubtless antiquity of Basque instrumental *-z* (see 1.8 below) and certain other suffixes, the presence of an *n-* genitive in Japanese and, for example, in Chechen, suggests to me a considerable antiquity. We can compare the Japanese genitive particle *no*, which Greenberg cites as possibly being an example of the genitival *n*, with the Basque genitive *-en*/*-ren*, e.g. *Elinen laguna* 'Elin's friend', *Josebaren laguna* 'Joseba's friend'. (Historically Japanese *no* had an attributive function: it marked the subject of a nominalized clause in Old Japanese [Shibatani: 347-348]).

1.6. Locative *n* (No. 30)

For Japanese Greenberg cites adverbs of time in *–na*, e.g. *asa-na*' in the morning', *yû-na* 'in the evening' and the locative postposition *-ni* 'in' as possibly belonging here. Compare Basque locative *-n*, e.g. *Bilbon* 'in Bilbo'.

1.7. Ablative *t* (No. 33)

Greenberg considers the basic meaning of this formative to be "evidently 'source,' from which genitive (e.g. Balto-Slavic), instrumental, and ablative uses are easily derived" (Greenberg: 158). For Ainu he cites an ablative form *-ke-ta*, e.g. *tumu-ke-ta* 'in the middle', and for Japanese he points out that Pröhle (1916: 160) considers *tu* in the archaic Japanese formula *ama-tu kumi* 'the god of heaven' ('heaven-*tu* god') to be cognate with the Uralic ablative-partitive *-ta"* (Greenberg: 159). I believe Basque ablative *-tik, -dik* 'from, through' as in *Bilbotik* 'from Bilbo' may be identical.

1.8. Instrumental *s* (No. 37)

Greenberg notes that Korean suffixes *–ssə* to nouns with the instrumental case marker *-lo*. We saw an example of Basque instrumental *z* in our discussion of diminutive *k* above, in section1.1. Greenberg's instrumental *s* may be represented in Basque by this instrumental morpheme. Trask (Trask: 201) affirms the antiquity of Basque instrumental *-z*.

1.9. Adverbial participle *p* (No. 41)

Basque prefixes *ba-* to the auxiliary (if there is one) or to the main verb to form 'if'-clauses (King and Elordi, 127)—that is, to a finite verb form (Trask: 225). Oppositely, Japanese suffixes the conjunctive particle *-ba* to the verb to form hypotheticals or conditionals. Compare Japanese *ikeba* 'if you go/he goes etc.' and Basque *joaten bazara* 'if you go' (*joan* 'go').

1.10. Negative *m* (No. 57)

Greenberg suggests prohibitive formative is perhaps to be found in the Ainu negative existential verb *isam* 'not to be'. Perhaps we can compare the Japanese prohibitive exclamation *Dame!* 'Impermissible!' (not cited by Greenberg) with Basque *damurik* in the exclamation *Damurik ez baitu atxeman!* 'Too bad he didn't find it!' (cited in Trask: 226) as possible (seemingly no longer productive) representatives of this formative.

1.11. Interrogative *n* (No. 64)

Greenberg cites, among other Ainu examples, Ainu *nen, neni* 'who?' "a form strikingly suggestive of Japanese *nan, nani* 'what?'" (233). Also strikingly similar to all the above is Basque *non* 'where?' Trask identifies the stem of *non* as *no-* (Trask: 97) (see 2.2 below). Is the *-n* of non the locational suffix *-n*? It would seem so.

2. Basque-Japanese grammatical formatives not indicated in Greenberg's grammatical evidence

2.1. Negative *s*

In Old Japanese negation was expressed by the negative verbal suffix *-zu*. The reader will recall that *-zu* and the two auxiliary suffixes, *-tu* and *-nu*, conjugate, but not fully, as mentioned above, in section 1.2 The conjugation of *-zu*, according to Akiba-Reynolds, was: Unrealized, --; Conjunctive, *zu*; Final (conclusive), *zu*; Nominal, *nu*; and Realized, *ne* (Akiba-Reynolds: 8). Note that the nominal and realized forms are with *n-*, not *z-*; negatives in modern Japanese are formed on *n-*, e.g. *nai* 'does not exist' and *-n*, e.g. *arimasen* 'does not exist (polite)'. Old Japanese had both *arazu* and *aranu* 'does not exist'.

Modern Basque expresses negation with the particle *ez* 'not', which, as Trask points out, immediately precedes the finite auxiliary or verb (Trask: 110). He reports that in Bizkaian Basque a variant form *ze* is found in early texts when followed by a subjunctive or an imperative (Trask: 209).

There is an important syntactic difference here, which presents a challenge, but, one hopes, finally not an insurmountable one, to the thesis of an ancient genetic connection between

Basque and Eurasiatic. The Basque negative particle *ez*, similarly to the hypothetical or conditional prefix *ba-*, precedes the verb, whereas the Japanese conditional conjuctive particle *-ba*, like the negative particle *-zu*, is a suffixed form.

2.2. Interrogative *s*

In addition to the stem *no-*, Basque has a second stem, *ze-*, on which interrogatives are formed, examples of which are zer 'what?' *zein* 'which?' and so on. One wonders if *-ze* of the Japanese lexeme *naze* 'why?' is related to this Basque stem. Japanese *na-* resembles the Basque stem *no-* (cf. item 1.11 above, "Interrogative *n*").

2.3. Perfective participle *-i*

Based on Trask's analysis of non-finite verb forms (Trask: 211-214), I refer to this formative as perfective participle *-i,* after his discussion on the history of the Basque prefective participle. Trask observes that "it is notable that the language shows traces of an ancient adjective-forming suffix *-i*. The clearest case is *gatz* 'salt', *gazi* 'salty'. A number of others have been proposed, especially by [the Basque linguist R. M. de] Azkue (1923) . . . Since perfective participles are conspicuously adjectival in nature, it may be that an ancient adjective-forming suffix was pressed into service to derive participles both from ordinary nouns and from verbal nouns, but here I confess I am stretching the evidence to the limit" (Trask: 212).

It may be possible that the Japanese and the Basque adjective-forming suffixes *-i* are related and that the Japanese reflex of this perfective participle *-i* is represented in what Shibatani (1990: 215) calls the "adjectival noun". Called "adjectival verb" in the traditional grammar because the copula, *da*, is optional, it is derived by suffixing *-i* to a nominal root, e.g. *too-i* 'far' (root *too-*), negative *too-ku nai* 'not far', *aka-i* 'red', *aka-ku nai* 'not red'. This suffix appears to be ancient; its predicate-like behavior indicates a likely verbal origin.

2.4. "Mysterious" prefix *i-*

Basque and Old Japanese exhibit a prefix *i-* whose origin or function is "mysterious" (Murayama 1976: 422); Trask: 211). Trask observes: "Virtually all ancient verbs show a prefix **e-* in all their non-finite forms; this appears today variously as *e-*, *i-*, *j-* or zero. . . . The function of this prefix is not known . . . . [Elsewhere] I argue that it originally derived a verbal noun from a verbal root" (Trask: 211). Old Japanese, as Murayama points out, had a "somewhat mysterious and unclear 'prefixed *i* -' that appears in a variety of Old Japanese verbs". Examples given by Murayama include *i-tuk-u* 'build' alongside the more usual *tu-k-u* 'build' (Murayama 1976: 423).

Admittedly, this is an extremely tenuous linkage of Basque and Euroasiatic. Obviously much more study is called for. And was Japanese *iru*, for instance, derived by this prefix? Do both *aru* and *iru* share some link to Greenberg's locational *–ru* formative (No. 29) in the very remote past? Murayama identifies this prefix, rather convincingly in the context of the fairly impressive argument that he makes in support of his hypothesis of Japanese as a mixed language, with a Malayo-Polynesian "proto-prefix" **mi-* that derives verbs from nouns (Murayama 1976: 422-423), but discussion of Murayama's hypothesis is beyond the scope of the present paper. We note only that whereas according to Murayama this Old Japanese prefix may have derived verbs from nouns, Trask's analysis of the possible function of the Basque prefix differs somewhat.

3. Simplification in Japanese

3.1

Japanese scholarship in the last several decades, perhaps led most prominently by Ôno Susumu and Murayama Shichirô, has tended to explain the difficulty of establishing a genetic relationship for Japanese by appealing to a "superstratum- substratum" hypothesis (Ôno) or a "hybrid" or mixed-language hypothesis (Murayama), in either case involving a coming-together of an Altaic language from northeast Asia and a Malayo-Polynesian or Austronesian language from southeast Asia in the Japanese archipelago. (Ôno has subsequently added a third language input, Tamil, of which more below in section 3.2).

Following Murayama, Akiba-Reynolds argues for a pidgin-creole or mixed origin of

the language "largely based" on Altaic and Malayo-Polynesian (Akiba-Reynolds: 20). She rejects the Altaic hypothesis as inadequate to explain many Japanese singularities, an argument that accords with Greenberg's reluctance to connect Japanese, Korean and Ainu closely with Altaic. She observes that her reconstructed Pre-Japanese seems to resemble pidgin-creole languages "in a significant number of respects" (Akiba-Reynolds: 18-20) and offers rather impressive evidence in support of her contention.

On this basis Akiba-Reynolds sees pidginization progressing "to such an extent that the grammar of the resultant pidgin would be no longer comparable with the grammar of the source languages" (Akiba-Reynolds: 18). This could explain the comparative simplicity of Japanese morphology in contrast to the complexity of the Basque. The strong Basque similarites to the formatives examined in this paper can be taken as one indication, however, that pidginization did not occur to an extent significant enough to alter grammatical formatives. Rather, the similarities support an overall view of language replacement over hybridization.

In support of the language replacement hypothesis, it can be argued that Basque phonology, for instance, does not differ greatly from Japanese, and that the phonology of the language which arrived via the Korean peninsula in turn must not have been significantly different from the indigenous, supposedly Austronesian, language already present at the point of contact, presumably in northern Kyûshû and western Honshû. Adoption of the CV pattern, present already in Old Japanese, would have resulted, following Murayama's hypothesis, from the influence of Malayo-Polynesian phonological rules.

Another possible argument for language replacement is the presence of sequential voicing in Basque (the example *dago* (from *da* + *ko*), was noted in 1.1 above). Murayama cites the presence of this phonological phenomenon in Japanese and Malayo-Polynesian (he refers to it as intervocalic consonantal voicing) as one of many pieces of evidence that the Malayo-Polynesian elements in the Japanese language "constitute a vital and powerful structural component (*kôsei yôso*) of that language" (Murayama 1976: 420). Once again, however, a similar phenomenon is observed in Basque (although a kind of sequential *de*voicing as well is present).

Third, as Akiba-Reyonds points out, Murayama (1969) presents data to show, in support of his hybrid language hypothesis, that, like Malayo-Polynesian, Old Japanese had prefixes in addition to suffixes (Akiba-Reynolds: 18). One example would be the intensifier *ma-*, which has an exact counterpart in Malayo-Polynesian. Japanese examples are *naka* 'center', *manaka* 'exact center' or *kuro* 'black', *makkuro* 'jet black'. Trask reports the presence in Basque, however, of "a mysterious prefix *ma-*which has no identifiable semantic value. We find doublets like *hegal* and *magal*, both 'pear' . . . In all likelihood, this *ma-* merely represents an obsolete way of forming 'expressive' variants of lexical items" (Trask: 258). While what Trask offers is an informed opinion rather than a proven fact, it seems possible to consider that Japanese *ma-* may be linked to the Basque prefix *ma-* and the Malayo-Polynesian prefix *ma-* alike.

3.2

Subsequent to the publication of Akiba-Reynold's 1978 paper, Ôno has presented the case for a Tamil element or stratum in Japanese. He has produced some impressive correspondences for Tamil, for a third component in the formation of Japanese. (One example of his evidence is Tamil *iru* 'to be located'.) He continues to argue for the introduction of wet-rice agriculture, metallurgy and the use of mechanical technology by Dravidian- (Tamil-) speaking immigrants to the Japanese archipelago in the Yayoi era (ca. 2400 to 1650 B.P.) (Ôno: 2002), but does so in the face of considerable logistical difficulty. Mark Hudson (1992) has argued convincingly for the impossibility of such a scenario on archeological, geographical and other grounds. Rather, I see the solution in the inclusion of Dravidian, as in the Nostratic grouping. Tamil appears to be perhaps the most conservative of the Dravidian languages, which accords with its geographical circumstance as the extreme southernmost member of the family (making it therefore the one that has migrated the farthest from the original homeland).

3. Conclusion

"Basque", Trask observes, "in the last thousand years appears to have been an astonishingly conservative language . . ." (Trask: 47). Japanese likewise appears to have been deeply conservative, as the comparisons above, together with other aspects of the language, seem to bear witness. Like Tamil, Basque and Japanese are located at continental or sub-continental extremities. It has very recently been shown that the speech of the Kantô area of Japan, which includes Tôkyô, is more conservative, less innovative than that of the area where archeological evidence shows the immigrants from the Korean peninsula arrived at the beginning of the Yayoi era, to Japanese scholars' surprise. This should not be surprising. It seems clear that the farther removed from the original linguistic unity, the more conservative morphology tends to be.

While many of the morphological parallels or similarities seen above may seem quite striking, given the time and distance which separate Japanese and Basque, one can cite the homogeneity of Turkic, extending from Turkey and the Balkans to the Tien Shan and to the far north-east of Siberia, as support for the view that a deep Eurasiatic/Nostratic connection with ancestral Basque and Dene-Caucasian is possible.

4. Acknowledgements

I wish to express my thanks to my colleagues at Otsuma Women's University, Professors Kohno Takeshi, Murakami Takashi, Murata Yûzaburô and Yoshida Mistuhiro, for their invaluable suggestions and explanations with regard to Japanese. Needless to say, all views expressed here, and of course any errors, are my responsibility alone.

References

Akiba-Reynolds, Katsue. 1978."Internal Reconstruction in Pre-Japanese Syntax". Jack Fisiak, ed., *Historical Syntax*. Berlin: Mouton, 1-23.

Greenberg, Joseph H. 2000. *Indo-European and Its Closest Relatives: The Eurasiatic Language Family,* Vol. I: Grammar. Stanford: Stanford University Press.

Hudson, Mark. 1992. "Tamil and Japanese: Ono's Tamil Theory". *Asian and Pacific Quarterly of Cultural and Social Affairs*, vol. 24, no. 1, 48-63.

King, Alan R. and Begotxu Olaizola Elordi. 1996. *Colloquial Basque: A Complete Language Course.* London: Routledge.

Murayama Shichirô. 1969. "The Origin of the Japanese Language". *Minzokugaku Kenkyû* 35.4, 249-261.

Murayama Shichirô. 1976. "The Malayo-Polynesian Component in the Japanese Language". Journal of Japanese Studies, vol. 2, 413-436.

Ôno Susumu. 2002. "Tamilgo to nihongo". *Gengo Kenkyû*, no. 120, 117-130.

Shibatani Masayoshi. 1990. *The Languages of Japan*. Cambridge: Cambridge University Press.

Trask, R. L. 1997. *The History of Basque*. London: Routledge

Elam: A Bridge between the Ancient Near East and Dravidian India?[1]

Václav Blažek
Institute of Linguistics, Faculty of Arts
Masaryk University
Brno, Czech Republic

Abstract: Elamite is an extinct language of Western Iran attested from the beginning of the 3rd millennium BC in its own pictographic (later linear) script, perhaps of the same origin as the contemporary Sumerian script. The borrowing could have taken place during a colonization of Susiana from late Uruk (3300 BC). Beginning in the 23rd century BC a modification of Akkadian cuneiform script (peculiar to Elamite) as well as a linear simplification of Proto-Elamite script were introduced. The most recent inscriptions are from the period of Achaemenides (6-4 cent. BC) while the language was spoken probably till the end of the 1st millennium AD. The position of the Elamite language in genetic classification is not definitively solved. Besides evident borrowings from Sumerian, Akkadian and Old Persian, there are some quite hopeful morphological parallels to Dravidian. On the other hand, the number of convincing lexical cognates is so low that a close Elamo-Dravidian relationship cannot be accepted as proven. The following study offers an alternative hypothesis connecting Elamite with the Afroasiatic macro-family, not excluding a remote relationship with Dravidian.

1. Elamite language and script

The first certain attestation of the Elamite language is from the 23rd century BC. The so-called "Treaty of Naram-Sin," written in cuneiform script, was concluded between Naram-Sin (2254-2218), a successor of Rimuš, the son of Sargon of Agade (2334-2279), and Hita, the ninth king of Awan, against their common enemies the Qutians (Hinz 1964, 64; the data are borrowed from Steve 1992, 4). Hita's successor, Puzur (alias Kutik) -Inšušinak, the last of twelve kings of Awan (falling around 2200 BC), had developed the so-called Linear Elamite (= Proto-Elamite B = monumental) script, today known from 19 inscriptions from the 23rd cent. BC. The creation of the script can be explained as a reaction against the centuries-old cultural (and occasionally political) domination of Elam by Mesopotamia. The content of one of the inscriptions (A) is known thanks to its parallel Akkadian translation. Naturally, it represents a key to the decipherment of this script. Although the results and their application for the interpretation of other texts are not unambiguous, the language is certainly Old Elamite (Hinz 1969; Meriggi 1969a & 1971, 184-220). The origin of the Linear Elamite script is not artificial. It has its predecessor in the Proto-Elamite script known from around 1400 inscriptions of an economic nature found especially in Susa (3100-2900 BC). The Linear Elamite script with 103 known (mostly syllabic) signs represents a simplification of the older pictographic Proto-Elamite script with at least 400 signs (Meriggi 1969b, 156 & 1971, 185, 193-205; Parpola 1994, 35). The language of the Proto-Elamite script is not known, but there is no reason to suppose any other language than Elamite. The oldest tablets with Proto-Elamite pictograms are from the so-called level 16 at Susa (3100 BC). Two 'numerical tablets' appear even on level 18 (3300 BC) – contemporaneously with Uruk IV in Sumer, where the first invention of writing was probably realized. This fundamental borrowing of the idea of writing (besides numerical symbols, and perhaps no more than 10 signs: see Vaiman 1972; Meriggi 1969b) has been connected with the so-called 'First Conjuncture' (3300 BC) – the first wave of cultural expansion of the Sumerians. In this period three sites on the periphery of Mesopotamia were colonized: (1) Habuba Khabira on the Euphrates in

[1] This is a revised version of a paper previously published as: "Elam: a bridge between Ancient Near East and Dravidian India?," in *Archaeology and Language IV: Language change and cultural transformation,* ed. by Roger Blench and Mathew Spriggs. 1999. London/New York: Routledge.

Northern Syria; (2) Godin Tepe in the Zagros mountains of NW Iran; (3) Susa on the Mesopotamian alluvium in SW Iran (Lamberg-Karlovsky 1986, 195). In the 'Second Conjuncture' (3000-2900 BC) the Proto-Elamites repeat the same pattern as the Sumerians during the First Conjuncture: colonize foreign areas. Within a century of 3000 BC the sites of Tepe Sialk, Tal-i-Malian, Tepe Yahya and (ca 2900) Shahr-i Sokhta in Iranian Seistan were colonized by the Proto-Elamites from Susiana (Lamberg-Karlovsky 1986, 197, 199). The latter locality was transformed into a large urban complex of more than 100 hectares. It played an intermediary role in connecting Elam with cultural centres in Turkmenistan (Geoksyur, Namazga III), Afghanistan (Mundigak) and the Indus valley (Parpola 1994, 17). The famous Proto-Indus script has its origin (or at least its inspiration) very probably just in some later variety of the Proto-Elamite script (Fairservis 1992, 228; Parpola 1994, 53; Meriggi 1977 on the inscription from Shahr-i Shokta). The question of the genetic affiliation of Elamite is not definitivaly solved. There are several scholars who have cited some remarkable similarities between Elamite and Dravidian, especially in morphology. The most comprehensive study, by McAlpin (1981), must be completed and corrected (see Appendix 1).

In contrast with the relatively poor results of the Elamite-Dravidian comparison (especially in the core lexicon) the comparison of Elamite with Afroasiatic looks very promising (see Appendix 3). The hypothesis of a closer Elamite-Afroasiatic relationship can be supported, at least indirectly, by archaeological evidence as well. Before 3000 BC there are only two periods where the material cultures of Khuzistan (Elam) and Sumer are closely comparable: (1) Late Uruk expanding in Susiana during the 'First Conjuncture' (see above); (2) Choga Mami Transitional (Iraq) expanding at the site of Choga Sefid (phase 5) in the Deh Luran plain (Iran) sometime in the 6th mill. BC. The conclusion of a cultural expansion is based on the introduction of certain plants and animals apparently not previously attested in Khuzistan: domesticated cattle and swine and various hybrid cereals, including hexaploid wheat, indicating that irrigation (attested in Choga Mami in the 6th mill. BC) was also introduced into Khuzistan at this time. It has been noted that a certain type of mud-brick also appears in Khuzistan at the same time. These simultaneous introductions have been interpreted as signifying an actual movement of new people into Khuzistan (Oates 1991, 24-25).

2. Sumerian language and script.

The Sumerian language was spoken by the people who lived in the alluvial plains of the lower Euphrates and Tigris at least from Uruk III, resp. Jemdet Nasr period (3100-2900 BC) onwards, but very probably also in the Uruk IV period (3300-3100 BC) and even earlier (Parpola 1994, 30-31). During these periods the first pictographic script was developed, and at least its idea exported to Elam and Egypt (3100 BC ?), cf. the carved flint knife from Upper Egypt (Gebel el-ᶜAraq) depicting on its handle a man in Sumerian dress conquering two lions, a common Mesopotamian motif, and (on the reverse) a naval battle in which Sumerian-type ships defeat Egyptian ships (Parpola 1994, 35-36; on the Late Uruk presence in Egypt, see also Zarins 1992, 71). It is almost a general opinion that the Sumerians are not autochthons in Mesopotamia. Höyrup (1992[94], pp. 60-61) has collected some authoritative conclusions:

> The fundamental observation is that no Sumerian etymology for the names of the oldest cities can be constructed, and that a large number of words of cultural importance (tools, products and professions) seem not to fit the normal phonology of Sumerian (Landsberger; Salonen). They are bisyllabic, which is rare for Sumerian roots, and often contain a consonantal cluster.

For more about pre-Sumerian toponyms see Appendix 2. Following I. Gelb (Höyrup 1992[94], p. 63, ftn. 82):

> The existence of entries in the Mesopotamian lexical texts with known syllabic values but with no corresponding logographic values indicates originally non-Sumerian words, which were perpetuated in the Sumerian writing, but not in the Sumerian language.

E.A. Speiser tried to identify the pre-Sumerian substratal language as Elamite. This idea can be supported. Among Elamite personal names the last two syllables are frequently repeated: *Šilhaha, Kunene, Hilulu, Kinunu, Nabubu* etc. (Meriggi 1971, 182-183). These forms are interpreted as 'Kosenamen' by Hinz & Koch (HK). A similar pattern is typical for some Sumerian divine names:

^{d}*Bunene*, ^{d}*Zababa*, ^{d}*Kubaba*, ^{d}*Inana*, ^{d}*Igigi*, ^{d}*Aruru*. Diakonoff 1981, 48 (his examples are quoted here) calls the source "Banana-language". The same pattern was one of the productive ways of forming diminutives in Egyptian (*ḫfll.t* "lizard" (Demotic), *ḥdqq* "rat", *ḫwrr* "divine calf", *ḫprr* "scarabeus") and Berber: Shilh *asĕlmam* "eel" vs. *aslĕm* "fish" etc. (Vycichl 1961, 250). Höyrup (1992[94], 34) presents his very revolutionary hypothesis proposing that Sumerian developed from a mid- or late fourth-millenium Uruk creole. The idea of a local melting pot is doubtless fruitful; naturally, it does not exclude the external origin at least of one component of this glottogenetic process. The preceding opinions are in good agreement with archaeological data indicating an extremely large population growth in Southern Mesopotamia during the Early Uruk period (3600 BC) – very probably as the result of immigration into this region (Lamberg-Karlovsky 1986, 196). In recent times more hypotheses concerning the genetic affiliation of Sumerian were formulated. Boisson (1989) has collected some lexical parallels between Sumerian and Dravidian. (See also Appendix 2.) The author and Bengtson (1995) include Sumerian in a large macro-phylum called "Dene-Caucasian," together with North Caucasian, Yeniseian, Burushaski, Sino-Tibetan etc., following Hüsing, Bouda, Braun, Christian. Militarev (1984; and later in a private communication) presents tens of Sumerian-Afroasiatic lexical parallels, which cannot be explained as Semitic borrowings.

3. Afroasiatic, Elamite and Sumerian, and the question of the Afroasiatic homeland

The following language families have been connected in the so-called Afroasiatic (= Semito-Hamitic/Hamito-Semitic = Erythraic = Lisramaic etc.) macro-family: Semitic, Cushitic, Omotic, Egyptian, Berber, Chadic. Their common origin is generally accepted, but their internal classification and a localization of their common homeland remain controversial. Two basic hypotheses for a localization of the Afroasiatic homeland have been presented: A. North East Africa; B. West Asia (Diakonoff 1991, 12-13 gives a good overview of them). The main argument against the Asiatic version (besides an aprioristic rejection of a biblical tradition) is the fact that all branches with the exception of Semitic are or were spoken in Africa. But the question of the homeland cannot be solved mechanically only on the basis of this disproportion. There are many examples of a similar or even more disproportional dispersion (Latin/Romance, Arabic, Indonesian, Swahili, English; Turkic). Not rejecting *a priori* the African hypothesis, I prefer the Asiatic localization for the following reasons:

(1) A neolithic character of Proto-Afroasiatic cultural lexicon. The only area, where the 'Neolithic Revolution' begins before the disintegration of Afroasiatic (ca. 11-10th mill. BC) is its primary area: the Fertile Crescent of the Near East. Militarev, [Pejros] & Šnirel'man (1984, 1988) identify the Proto-Afroasiatic *ethnos* with the authors of the early neolithic Natufian culture from the Syro-Palestinian region (11-9th mill. BC). This conclusion is in good agreement with the fact that Egyptian cereals are of Asiatic origin (Diakonoff 1981, 45).

(2) The zoological lexicon reconstructible for Afroasiatic reflects wild fauna attested in both North East Africa and the Near East (e.g. elephant, hippo, but not giraffe or rhino; cf. Blažek 1994).

(3) Very early mutual borrowings between Afroasiatic (not only Semitic) and Northern Caucasian (Militarev & Starostin 1984, 1994).

(4) The Afroasiatic stratum in Sumerian (§2), representing perhaps one originally independent dialect of Afroasiatic, later lost in the 'melting pot' of the Sumerian glottogenesis (Diakonoff 1981, 66; Militarev 1984, 1989; Kovalev & Militarev 1994).

(5) Exclusive Cushitic - South Semitic / dialectal Arabic isoglosses probably reflecting a Cushitic substratum in the Arabian peninsula (Militarev 1984b, 18-19; Belova 1989).

(6) The Nostratic hypothesis proposing a genetic relationship of several language families of the Old World (Afroasiatic, Kartvelian, Indo-European, Uralic and Yukaghir, Altaic, Dravidian, Elamite; probably also Chukchee-Kamchatkan, Nivkh, Eskaleutan).

The most natural "epicentre" of a primary disintegration is again the Near East. The preliminary estimates of the time of divergence of the Nostratic unity are not too different from the hypothetical time-depth of Afroasiatic (13th mill. BP). Starostin – an author of this rather paradoxical result – sees an explanation in the dichotomy Afroasiatic vs. "Micro-Nostratic" (= Nostratic minus Afroasiatic). A modified version is presented by Greenberg, who postulates a Eurasiatic macro-phylum consisting of the same language families as Nostratic, minus Afroasiatic, Kartvelian, Dravidian, and Elamite.

Finally, Greenberg also assumes a closer relationship of these languages and admits remote genetic links to his Eurasiatic. The authors of the classical Russian Nostratic hypothesis, Illič-Svityč and Dolgopolsky, trace a border between Western Nostratic branches characterized by apophony (Afroasiatic, Indo-European, Kartvelian) and Eastern Nostratic branches with a stable vocalism (for more detailed information see Blažek 1992b, 82-84).

The level of our knowledge does not allow any definitive conclusion. It is possible only to formulate certain models and to verify them in future research. The following partial solutions are the results of my own study of the problem. Abstracting from other Nostratic branches, the position of Elamite could be expressed as a bridge connecting Afroasiatic and Dravidian (**Fig. 1**), although the Elamite-Afroasiatic relationship seems to be closer than Elamite-Dravidian (cf. Appendix 3 vs. 1). An alternative but not diametrically different scheme is depicted in **Fig. 2.**

Elamite and pre-Sumerian ("Banana- language" ?) represent here peripheral dialects of an Afroasiatic continuum comparable with Chadic or Omotic. The central position of Egyptian correlates with a relatively high progessivity in development of its morphology (e.g. the loss of a prefixal conjugation) typical for a centre of any dialectal continuum in comparison with more conservative non-central dialects (Semitic, Cushitic, Berber).

Fig. 1

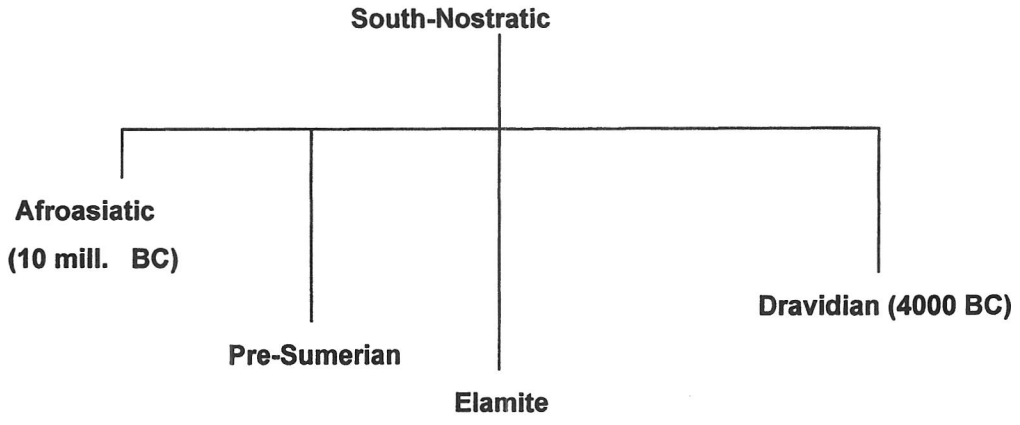

Fig 2

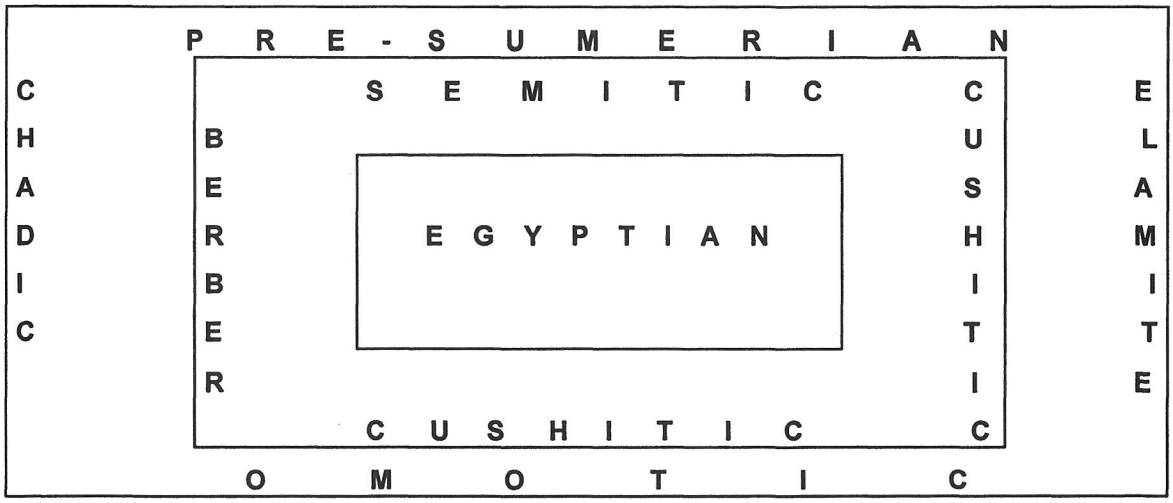

APPENDIX 1: Elamite & Dravidian

A hypothesis of an Elamite-Dravidian relationship, based especially on morphological comparisons, has had numerous proponents (Norris, Caldwell, Hüsing, Trombetti, Bork, Diakonoff, Vacek, McAlpin). The most detailed study of Elamite-Dravidian connections was presented in a series of papers and summarized in a monograph by McAlpin (1981). Besides some promising cognates, he presents several semantically or phonetically questionable parallels, including evidently incorrect comparisons based on erroneous interpretations of Elamite words, such as:

a. El(m) *hun* "water" (König 1965, 190; correctly probably "light" - see HK 717) /// Dr **uṉ* - "to drink, eat a meal" (DEDR 600) - MA 145: El+Dr; Dr **uṉ* - has a promising cognate in ECush **ᶜun-* "to eat / drink" (He 1978, 100)

or very probable borrowings from Sumerian or Akkadian:

b. El(m) *ukku* "head, chief; on" (HK 1210; cf. Sum *ugu* "head, skull, upper side; on" - IK 1104; perhaps Akk *ukkum* glossed SAG-SUHUR.SUHUR - see AHw 1405 - has the same origin) /// Dr **uk(a)-* "to ascend, rise, jump up" (DEDR 559; MA 95: El+Dr), but Kolami *cok-* "to climb", Parji *cokk-* id., *cotip-* "to raise" (DEDR 2828) signalize probably the initial **c-*;

c. El(m) *upat, upatta* "brick" (HK 1240; cf. Akk *ur(u)bātu* "coping stone" - AHw 1436) /// Dr **uppar-* "bricklaying, plastering" (DEDR 626,628; MA 96: El+Dr).

The new Elamite lexicon (HK) allows to extend the number of hopeful cognates:

d. El(n) *ulkina* "weapon" (HK 1218), "reed arrow" ? (Bork) /// Dr **alaku* "blade of a weapon, head of an arrow" (DEDR 237) /// cf. AA: CCh: Mandara *əlka*, Gisiga *helek*, Mafa *leked'*, Glavda *lāgha*, Margi *laga* "bow" (Lukas 1970, 30);

e. El(o) *ik* "votive gift" (HK 746) /// Dr **ik-* "to give" (DEDR 416);

f. El(n) *kutu* "cattle", (A) *kiti* "ox, calf, ass and cattle, foal of ass" (HK 548,489) /// Dr **kōṭ-ay* "bull, cow" (DEDR 2199) & **kūṭ-ay* "cow" (DEDR 1886); cf. Sum *gud* "bull, steer, cattle" (IK 367) which can be a source of El words;

g. El(o) *kun(n)a* "hair" (HK 513) /// Dr **kūntal* "hair" (DEDR 1892) - a compound; the second component is **tal-ay* "head" (DEDR 3103); cf. also Dr **kunkaṭi* "hair / crest of bird" (DEDR 1634);

h. El(A) *maka/i-* "to consum, digest" (HK 861-2) /// Dr **mookk-* "to eat / drink" (DEDR 5127);

i. El(A) **nar-* in *naranda, narante/i, narada, nara(na)te* "daily" (HK 991) besides *na(n)* "day" (HK 967, 968), compared by MA 103 with Dr **nāḷ* "day" (DEDR 3656) (having closer cognates in AA: ECush: Som *nal* "light"/ ECh: Ndam *nelnel* "day") /// Dr **nēr-* "sun, day, time" (DEDR 3774);

j. El(m) *nu* "a sort of corn (barley ?)" (HK 1004) /// Dr **nū* "sesamum" (DEDR 3720) and / or **nuvaṇ-ay* "Italian millet, panic seed" (DEDR 3712); cf. also Sum *nu(mun)* "seed, offspring" (IK 771,777);

k. El(n) *piti* "vessel" (HK 224-5) /// Dr **puṭṭi* "(earthen) vessel" (DEDR 4265A);

l. El(o) *ten* "sweetness, kindness" (HK 305) /// Dr **tēn* / **tīn* "honey", cf. **tī* - "sweet" (DEDR 3268);

m. El(A) *dud(d)u* "foal" (HK 345), "(camel) calves" (H 102) /// Dr **tūṭ-/*tuṭṭ-* "calf" (DEDR 3378).

APPENDIX 2: Sumerian & Dravidian

Most of the Sumerian - Dravidian lexical parallels (Boisson), including the oldest Sumerian toponyms etymologizable via Dravidian (Fähnrich), can be supplemented by Afroasiatic data (Militarev sees in them an influence of a pre-Semitic Afroasiatic substratum in Sumerian):

n. Sum *Buranun(a)*, Akk *Purattum* "Euphrates" (IK 157; Edzard, Farber & Sollberger 1977, 208) /// El(n) *Pirin* 'river name, probably Karun in Susiana' (HK 209) /// Dr **puṛ-ay* "river" (DEDR 4318; Fähnrich 1981, 91: Sum < Dr); Note: Sum *Idigna*, Akk *Idiqlat* "Tigris" has a hopeful etymology in the Sum compound **idi-gina* "running river" (Albright 1976, 148).

o. Sum *Uri* 'a city from south Sumer', *uru* "city" (IK 1137) /// Dr **ūr* "village, town, city" (DEDR 752; Fähnrich 1981, 91) or Dr **uṛi* "place, site, side" (DEDR 684) /// ? El **mur- /*wur-*?/: (o) *muru* "(some)where", *murut* (g.) "the earth", *murun* "earth" (HK 952, 954, 964; MA 106: El+Dr) /// ? AA **war-/*wur-* > ECush: Oromo *warra* "family, kin", Arbore *warí* "household"; Ch: (W) Hausa *wúríi* "place", (C) Gabin *wúùre* "town", Muturua *urhai* "Dorf", Makeri *wɔrɔ* "village", (E) Dangla *wére*, Migama *wèré* "place", Sumrai *wóram* "kin"; ? Eg(OK) *w* (< **w3* ?) "district, region" (EG I, 243; Takács p.c. Eg+El) and / or (Pyr) *i3.t* (< **iu3.t* < **iurt* < **wur-t* ?) "place" (EG I, 26); Note: Hattic *fur(i)* [*wuri* ?] "land" (Girbal 1986, 65, 69, 129, 150, 167) can represent the same term reflecting the beginning of a Near Eastern urban civilization.

p. Sum *éri* "city" (IK 278) /// El *ari* „Dach, Obergeschoss" (HK 83; AHw 264) /// Dr **aṛ-ay* "room of house" (DEDR 322) /// AA **ʿayr-/*ʿary-* > Sem: Ug *ʿr* "city", Hbr *ʿīr* id., OSA *ʿr* "castle" (Segert 1984, 196; Aistleitner 1965, 241); ECush: Afar *ʿàri* "house, tent", Saho *ʿarii* "family, house, kin"; ? Eg(MK) *ʿ.t* (< **ʿ3.t*) "chamber", (late) *ʿ* (< **ʿ3* ?) "house" (EG I, 160, 159; Takács p.c.).

q. Sum *an* "heaven; high, up" (IK 64) > Akk *Anu(m)* "God of heaven" (AHw 55) // Dr **aṇ* "upper part, above" (DEDR 110; Boisson 1989, 41: Sum+Dr) /// ? AA: Sem: Akk *an(a)* "to, on" (AHw 47); HECush **hana* "over, above" (Hudson 1989, 109).

r. Sum *é-ri-a* "deserted country, steppe, pasture-land" (IK 254) /// Dr **ere-* "black soil" (DEDR 820).

s. Sum *gár* "cream" > Akk *garūm* "cream" (AHw 282), cf. Sum *ga* "milk" /// Dr **kaṛ-* "to milk" (DEDR 1385; Boisson 1989, 43: Sum+Dr) /// AA **kar-* > Sem: Syr *kar^{e}-* "beestings, colostrum, curdled milk"; Cush: (N) Beja *kar* "butter"; (E) Rendille *keéra* "fresh milk"; Berb: Ahaggar *a-kru* "curdled milk, curds" (Militarev 1984, #23: Sum+AA).

t. Sum *nundum/n* // Emesal *šumdum* "lip" (Schretter 1990, 258) /// Dr **noṇṭ* - "to kiss, caress" (DEDR 3787) // **cuṇṭ-* "bill, lip, mouth" (DEDR 2664; Boisson 1989, 42: Sum+Dr) /// AA: Omot: Koyra *nunaa*, Chara *noonaa*, Gimira *noon*, Anfilo *noonoo*, Mocha *noono* "language, mouth, lip".

u. Sum *si* "to give" (IK 866) /// Dr **cī* - "to give" (DEDR 2598; Boisson 1989, 17: Sum+Dr) // AA **say-* > Sem: Ug *šy*, Hbr *šay* "gift" (Aistleitner 1965, 304); ECush: Som *sii*, Boni, Rendille *síi* "to give" (He 1978, 95), Arbore *sihis-*, Elmolo *síise*, Dasanech *šii-š*, Yaaku *-isɛʔɛ* id.; ? Eg(old) *ỉsw* "compensation, salary, reward", Copt *asu* "price" (EG I, 131; Vycichl 1983, 16; Takács p.c.: Eg+AA).

Some other cultural words appearing in Sumerian, Afroasiatic and Dravidian are discussed in Blažek & Boisson (1992). The separate Dravidian-Afroasiatic cognates are collected in Blažek (1992a).

APPENDIX 3: Elamite - Afroasiatic comparisons

I. Body parts & space orientation

1. El(m) *el(t)* "eye" (HK 396,394) /// AA **ʔil-(at-)* "eye" (Greenberg 1963, 56) > Cush **ʔil-(t-)* (Do 1973, 144-5; Eh 1987, #326) // Eg(Pyr) *ỉr.t* (EG I, 106) // Berb: Shilh *tiṭṭ* < **ta-ʔil-t*, pl. *al(le)n* Ch: (C) Hidkala *ílí*, Alataghwa *ilyia*, Vizik *iri/ili*, Buduma *yíl*, Mandague *ʔàl* (pl.) /// Dr **āli* "pupil of eye, eye ball" (Zvelebil, JAOS 105, 1985, 658).

2. El(m) *buni* "heart" (HK 234) /// AA **b[u]n-* > ? Sem: Akk *abunnatu(m)* "navel, umbilical cord" (AHw 9) // Eg(Med) *bn.tj* (du.) "female breasts" (EG I, 457) // Ch: (C) Gulfei *fɛnɛ*, Makari *fînɛ* "breast".

3. El(m) *kassu* "horn" (HK 409) /// AA **ḳVsw/y-* "horn" (Blažek 1989, #66) > Cush(N): Beja *koos* horn; tooth" // Omot **ḳusim* "horn" > Ubamer *qošma*, Dizi *usum*, etc.// Berb: Senhaja *a-qaššaw*, Matmata *qiš*, Harawa *kiišu* id. // Ch: (C) Logone *káāŝú* id.

4. El(m) *kir*, (A) *kur* "hand" (HK 469,523,529) /// AA **ḳar-* "arm, shoulder" > Cush(E): Som *qarqar* "(upper part of) shoulder" // Eg(MK) $q^{c}ḥ$ > **q3ḥ* (?) "arm, shoulder" (EG V, 19); *-ḥ* is probably a body parts suffix, cf. *ỉbḥ* "tooth", *b3ḥ* "penis", *ḏnḥ* "wing, leg", *gmḥ.t* "lock", *s3ḥ* "toe", *sḏḥ* "calf (with foot)", *spḥ.t* "Rippenfleisch" - maybe identical with $ḥ^{c}$ "body, flesh" (EG III, 37-8) // Berb: Shilh *iġir*, pl. *iġariun* "shoulder", cf. *taġəruṭ*, pl. *tiġoraḍ* "shoulderblade" /// Dr **kir-* "ankle, wrist" (DEDR 1563).

5. El(A) *mat*, *madda* "with young" = "trächtig" (HK 855) /// AA ** m[a]ṭ* - > Cush: (E) Afar *maḍaḍ* "uterus, womb", cf. *maḍ* - "to copulate", Burji *maḍ -iss-* (caus.) "to marry" (Sa 1982, 139) ? // Berb: Ahaggar *temiṭ-* "uterus, womb".

6. El(m) *pat* "foot; under" (HK 111) /// AA **pVd-* > ? Sem: Akk *padānu* "way, path", Mehri *awōfəd* "to look for a footprint, Arab *wafada* "to come, travel" // Eg(Med) *p3d*, (D 18) *pd* "knee; to run", Copt *pat* "knee, foot, leg, thigh" (EG I, 500; Vy 165) // Berb: Mzab *fud*, Ghat *afud*, Zenaga *offuḏ* "knee" // ? Ch: (E) Mubi *fúudí* "thigh" /// Dr **paṭ-am* "palm (of hand)/sole (of foot)", **paṭi* "step" (DEDR 3843,3850). Note: A similar semantic dispersion is known also in the case of the Indo-European etymon **pōd-s*, g. **ped-és/-ós* "foot", **pedo-m* "bottom, place", **pedó-/ā́* "sole, step, trace" (Pokorny 1959, 790), probably related on Nostratic level.

7. El(n) *pur* "fingernail" or "(nail of) thumb" (HK 241) /// AA **par-* or **far-* (Illič-Svityč 1984, 70-77, #362) > Cush(E) **far-* > Som *far*"finger" (Do 1973, 41-2) // Omot: Koyra *partaa* "finger" // Ch: (W) Hausa *farce* "fingernail", Gwandara *apiraci*, Bolewa *paala* ; (C) Hina *mbraa*, Mandara *falidze*, Gidar *purzlumay*; (E) Mubi *féerí*, Jegu p^{h}*ílló* /// ? Dr **vir-al* "finger, toe" (DEDR 5409), cf. Dr **par-aṇṭu & *var-aṇṭu* "to scratch with fingernails" (DEDR 4023, 5322).

8. El(n) *san* "blood" (HK 1053) /// AA **ʒVn-(P-)* (Blažek 1989, #17) > Omot: Zayse *zonne* "pus", Hamer *zom(ʔ)bi*, Karo *zunṃi* "blood" // Eg(Pyr) *znf* "blood", Copt *snof* (EG III, 459; Vy 1983, 193) // Berb: Ifoghas *azeni*, Ghat *azəni*, Ayr *azni*, Ahaggar *ahěni* id. // Ch: (W) **zanyam* > Hausa *jíníi*, Montol *šiyìm*, Galambu *ǯàamá*, Kulere *zòm*; (C) Bata *ǯambɛ*, Bachama *zàmbäy*, Gudu *aǯin* id.

9. El **siha[n]*: (m) *sihha* "tooth", (o) *sihhan* NP (HK 1071) /// AA **si[ḥ]n-* "tooth" (Do 1973, 91-2) > Sem **šinn-* (Ls 504) // Cush(S) **siḥn-* (Eh 1980, 180) // Berb: Ahaggar *esiin*, pl. *isiinen* // Ch: (W) SBauchi **sin*, Ngizim *yaanau*; (C) Hurzo *tlahaaŋ*, Musgu *šiŋ*; (E) Jegu *saŋo* etc. id.

10. El(n) *siri* "ear", cf. *siri* "true, right" (HK 1089) /// Cush(C): Waag *šər* "to hear" // Eg(late) *sy3* "to recognize, know" (Fa 212; EG IV, 30) // ? Ch: (C) Zelgwa *tsaṛaḳa* "to hear".

11. El(m) *šara* "under" (HK 1132) /// AA **sar-* "back" (Co #269) > Sem: Arab *sarā* "back", Soqotri *sar*, Mehri *sār* "behind, after" // Cush: (N) Beja *sarāt* "back"; (C) Xamir *səra* id., Awngi *sər* "lower part"; (E) Afar *sàrra* "back, rear", Burji *saro* "tail", Yaaku *sɛɛrɛy* "below, down"; Dahalo *sàre* "back"; (S) Burunge *sira* "buttocks" // Eg(Pyr) *s3* "back" (EG IV, 8).

12. El(A) *šimme* "(his) nose" (HK 1170); originally maybe **šin-me* with the same suffix as *tit & tit-me* "tongue" and the assimilation as *imme* "not" < **in-me* (HK 342; 754,757,758) /// AA **sin-/*sun-* > Cush: (C) **əsäŋ-/*əsan-* "nose"; (E) **sin-/*sun-/*san-* id. (Eh 1987, #476); Dahalo *sina* id. // Eg(Pyr) *sn, snsn* "to smell" (EG IV, 153, 172,277) // Ch: (W) Hausa *sunsuna* id. Note: An alternative cognate can be seen in Sem **ŝ-m-m* > Arab *šamma* "to smell", *ḫašm* "nose".

13. El(n) *tebba /teppa* ?/ "before, up" (HK 307) /// AA: Eg(Pyr) *tp* "head; on, upon" (EG 263, 273) // ? Cush: (E) Burji *tip-óo* "skull" (Sa 1982, 177).

14. El(n) *tipi* "neck" (HK 333) /// AA **duby-* > Sem **d-b-r* "to be hinder, back", Mandaic *dibra* "back, tail", Arab *dubr* "tail" // Cush: (E) **dib-/*dub/*dab-* "tail, back" (Sa 1982, 57), cf. Oromo *duba* "back, behind" // Omot: Kullo *duupiya*, Karo *dibini*, Bako *doobanna* "tail" // Ch: (C) Gisiga, Mafa *dəba* , Gidar *dúbo* "back".

II. Human society

15. El(m) *ah(a)-pi* "origin, kin, genealogy" (HK 15,33,35, 392); *-pi* = pl. suffix /// AA **ʔaḫw-* > Sem **ʔaḫw-* "brother", **ʔaḫw-at-* "sister" (Cohen 1970, 15) // ? Cush: (E) Arbore *ʔáw* "maternal uncle" // Eg(BD,NK) *ḫ(w/y)* "child" (Vy 258) // ? Ch: (C) Boka *xwəyà*, Musgu *aḫíi* "son".

16. El(m) *bali* "male" (HK 131-2) /// AA **bal-/*bil-* > ? Sem **baᶜl-* "lord, husband" // Eg(OK) *by3* "to be a powerful being", *b33w.t* "virility" (EG I, 413,417) // Ch: (W) Sura *ḅál* "strength, strong, powerful"; (C) Logone *bíle* "man, male", Kuseri *bɛlom*, Gulfei *bələ* "man".

17. El **eri /*iri* "uncle" (HK 401,774) /// AA **ʔary-* "kinsman" > Sem: Ug *ʔary* "son" or "brother" // Eg(Pyr)*ỉry* "companion" (Ward, JNES 20, 1961, 32; EG I, 105) // Cush: (N) Beja *'aar* "female relatives"; (C) Awngi *ŋärá* "her husband" < **ŋi-ärä*; (HE) **aroʔo* "husband"; (S) Mbugu *m'áro* "neighbor; kind, related thing", Asa *ʔarato* "twins" // Ch: (W) Kulere *ʔyer* "brother", Bokkos *re*, pl. *ʔarya* "man".

18. El(m) *hiš* "name", *hiša* "praise, glory" (HK 662,669) /// AA **ḥ/ḫaS-* > Sem: Akk *ḫasāsu* "to remember", *ḫasīsu(m)* "ear, wisdom", Ug *ḫss* "to feel"; Arab *ḥassa* id., *ḥiss* "voice" // Eg(OK) *ḥsy* "to sing" (EG III, 164-5) // Cush: (E) **haašaw-* "to chat" (Sa 1982, 88) > Rendille *xawes* "tale" etc.; ? (S) Asa *has-* "to hear".

19. El(o) *hit* "troops", (m) *hitra* "warrior" (HK 665-6) /// AA **ᶜad- /*ᶜid-* > Sem: Hbr *ᶜɛḏy-eḵ* "the prime", Soqotri *ᶜed(e)* "vie, esprit", Geez *ᶜəd* "viri, masculi, mariti, viri fortes", Tigre *ᶜad* "tribe, family,people" (Ls 56) // Cush: (E) Som *ᶜed, ᶜid* "people", Rendille *et* "person, man", Arbore *ʔedan* "people" // Omot: Ometo **ad(d)e* "man, male, husband", Aroid * *e(e)d* "man" // Berb: Shilh *id* "people", Ksur *idu* "kin" // ? Ch: (C) Musugeu *hiddi* "man". Note: The analogical semantic dispersion appears e.g. in Indo-European: Hittite *tuzzi-* "army, camp" vs. West IE **teutā* "people".

20. El(o) *igi* "brother" (HK 743) /// AA **ʔagy-* > Cush: (C) Bilin *ʔäg,* Kemant, Awngi *ag*, Xamir *ig*, Kunfäl *yaga* "uncle"; (S) Asa *ʔagok* "mother's brother" // Omot: Ubamer *agi* "aunt".

21. El(o) *iza* "cousin" /// AA **ʔiS-* > Cush: (C) Awngi *iṣyaa* "brother"; (E) Tambaro *izoa*, Kambatta *hizoo* "brother"; ? Boni *éésə* "mother's brother", Oromo *eessuma* "maternal uncle" // Omot: Basketo *išaa*, Wolaita *iša* "brother", Koyra *ičča* "id., paternal uncle", Yemsa *ištaa* "uncle"; Hamer *išma* "brother".

22. El(o) *liba* "servant, groom" (HK 818-9) /// AA ? **lyab-* (Do 1973, 164,229) > Cush: ?(N) Beja *rába* "male; capable, able"; (E) **leb-* "male; strong" (Sa 1979, 22; Id. 1982, 131); (S) Iraqw *láwaalee* "slaves" // Omot: Dizi *yabu*, Na'o *iab*, Sheko *yaab* "man".

23. El(o) **ma(a)n-* "might, power" (HK 846) /// AA **manw/y-* "man" (Illič-Svityč 1976, 58, #292) > Cush: (LE) Som *mun* "male", (HE) **manna* "man (people)" // Omot: Wolaita *minoo* "warrior", Kachama *mono* "strong" // Berb: Zenaga *miin*, pl. *måån* "man", *(u)man* "kin", Zwawa *iman* "person, life" // ? Eg(Pyr) *mn* "someone", Copt *man* "a certain person / thing" (EG II, 64-5; Vycichl 1983, 114) // Ch: (W) **mani* "man, husband, people" (St 232, #801); (C) Logone *meeni* "man" /// ? Sum **emen* > **ewen* > *en*, Emesal *umun* "lord" (Schretter 1990, 263) /// Dr **maṉ* "king, lord, warrior" (DEDR 4774).

24. El(A) *mal* [*wal* ?] "child, baby" (HK 903) /// AA **wayl-/*waly-* "child" > Cush: (E) Sam **weil* "child", **wàlàál* "brother"; Elmolo *wéil*, Dasenech *vèèl* "child" // Berb: Libyan *w* "son" vs. *wl.t* "daughter" // Ch: (C) Buduma *wuli*; (E) Sumrai *wiil* "child".

25. El(m) *mu(h)ti* "woman, wife" (HK 948, 961-2) /// AA **maṭ-/*matH-* "woman, wife" > ? Sem: Arab*m-t-t* "to be related with somebody through marriage" or *m-ṭ-ʔ/w* "cohabiter avec une femme" (Vycichl, *AION* 50, 1990, 80) // Cush: (E) Sidamo *matè* "wife" // Omot: Shinasha *maton* and/or Kachama *māṭo* "woman" // Berb: Ahaggar *taməṭ* "woman", *məṭ* "femme sans aucun valeur", Djerba *tamáttoṭ* "woman" // Ch: (W) **mata* "woman, wife" (St 232, #796); (C) Bachama *mata* "woman", Wadi *miitti* "Weib".

26. El(o) *nab* or *nap* "god" (HK 966, 970-1) /// AA **na(ya)b-* "lord" > Sem: Arab *nāb*, pl. *ʔanyāb* "tribal chief" (Ember, ZÄ 53, 1917, 83: Arab+Eg); Mehri *nōb* f. "grand" // Eg(Pyr) *nbw* "lord", Copt *nāb* (EG II, 227; Vycichl 1983, 138) // ? Cush: (E) Afar *naba* "to be big", *nabam* "very, much", Arbore *níib* "greatly, very".

27. El(A) *puhu* "boy", cf. *punna* "young" (HK 230, 238,240) /// AA **p/fu[ġ]-* > Sem: Ug *pġy* "boy", *pġt* "girl" (Segert 1984, 198) // Ch: (W) Bokkos *fú*, Sha *foy*, Kulere *fwè, fo* "boy, child" /// Dr **poy* "girl" (DEDR 4532).

28. El(A) *ruh* "man", (o) *ruhu* "offspring" (HK 836,1044-6, 1049) /// AA **rVḥ/ḫ[w]-* > ? Sem: Akk *raḫū, reḫū(m)* "to beget, pair" (AHw 969) // Eg(OK) *rḥ.w* "people" (EG II, 441) or (Pyr) *rḫy.t* "men" (EG II, 447), cf. *rḫ* "to copulate" ? (Fa 152).

29. El(m) *šak* "male offspring, son" (HK 1110) /// AA **Sak/ḳ(w)-* > Cush: (E) Oromo *sookiyyaa* "adolescent" // Berb: Ahaggar *ašaġu*, pl. *šaġet* "young man" <**ā-sāġuh/*sāġuh* (Prasse 1974, 62); Guanche *suka* "son" vs. *sukaha* "daughter" (Wo 408) // Ch: (W) Hausa *saako* "a younger brother" vs. *saakuwaa* "a younger sister".

30. El(A) *zin* "baby, suckling" (HK 1291) /// AA **ʒin-/*ʒun-* (?) > Ch: (W) NBauchi **ʒin-* "child"; (C) Gisiga *zuŋ*, Bachama *nze* "son, boy" /// Dr **cinna* "small", cf. Brahui *cunā* "child" (DEDR 2594; MA 100: El+Dr).

III. Natural phenomena

31. El(m) *amni* "mountains", (A) *amnu* "mountain" ? (HK 55, 517) /// AA **ʔabun-* "stone" > Sem **ʔabun-* id. (Ls 4) // Eg(Med) *ỉbnw* "mineral material, alun", Copt *obn, ōben* "alun" (Vy 48-9) // Cush: (N) Beja *'awe* "stone" < **ʔawen-*, cf. *siku-awn-eb* (acc.) "Quartz" (Munzinger); (C) **ʔamb-* "mountain" < **ʔabn-* // Berb **abūn* "stone" > Sus *awwun / aggun* etc.; Guanche *t-abonas* (pl.) id. (Rössler, *Oriens* 17, 1964, 214) // Ch: (W) **ʔabuni* "millstone" (St 230, #781).

32. El(A) *bel* "year" (HK 188) /// AA **bVl-* > ? Sem: Ph *bl*, Hbr *bul* "name of a month" (Cohen 1970, 51) // Cush: (E) Sam **bil-* "month" (He 1978, 76), Sidamo *bululo* "year"; (S) Qwadza *balaʔeto* "year", ? Alagwa *balalu* "days" // ? Ch: (W) Fyer *wél*, Sha *wúl*, etc. "year".

33. El(o) *hal* "land, bottom, region, city" (HK 574,594) /// AA **hal-* "place" > Cush: (E) Som *hal* "place" // Berb: Mzab *al* "place", Zenaga *al* "id., country".

34. El(A) *har* "Stein" (HK 623) /// AA **har-* "mountain, rock" > Sem **harar-* "mountain" > Hbr *har*, *hererī*, Ph *hr* id. (Klein 1987, 167) // ? Cush: (E) Yaaku *hɛ́ɛ́rɔ'*, pl. *hɛrɔ́r* "(big) rock" // Berb: Ahaggar *ahor* "accumulation of rocks" /// Dr **ar-ay* "stone, rock" (DEDR 321).

35. El(o) *hun* "light" (HK 717,697,719-20); cf. (o) *nahi[n]ti* "God of sun", (m) *nahhunte* "sun" = **naN* "Tag" & *hunti* "Beleuchter" (HK 979-80) /// AA **[h]Vn-* > ? Cush: (E) Burji *hin'-ícco* "sun" // Ch: (C) Zelgwa *həne*, Paduko *həni*, Hurzo *hənde*, Mandara *hạr* "day (24 hours).

36. El(m) *ki-el* "region, district", (n) *ku-el* "region" (HK 463; 501) /// AA **kal[w]-* > Cush: (E) Oromo *kaloo* "pasture land" // Berb: Adghaq *akal*, Zwawa *akkal*, Ntifa *akäl* etc, "earth" // Ch: (W) Tangale *kálaw* id.

37. El(o) *lali* "source" (HK 813) /// AA **lay-(l[ay-])* > Cush: (N) Beja *lil* "to be wet, damp, moist"; (E) Afar *lay*, pl. *laayl* "water", *layhintii* "source"; ? Oromo *lolaa* "flood" // Berb: Libyan *lilu* "water" (Hesychios); Matmata *ilil* "sea", Zenaga *ell* "id., big river". Note: Hittite *luli-* "lake, pond, sourcee, well" resembles rather El *lali* than Sum *túl* "source" connected with Hittite by Puhvel, IF 81, 1976, 27.

38. El(o) *sud-/šut-me* "night" (HK 1018,1193-4,1170) /// AA **sud-/*sut-* > Sem: Arab *swd* "to be black", OSA *s(w)d* Cush: (N) Beja *sootay, suutay, sooday* "of dark color, dark-brown, -grey // Omot: Dime *suut-u*, Galila *šoyt-i*, Ari *soyt-i*, Hamer *soyt-i, soot-i* "night".

39. El(n) *tep /deb* ?/ "rain" (HK 311) /// AA **dib-/*dub-* > Cush: (E) Rendille *dubbat* "cloud", Hadiya *duuba* id. // Omot: Dizi *diɛb* "to rain", Kafa *dup* id.; Dime *deeb*, Ari *doob* "rain" // Ch: (W) Jimbin *dabuna* "rainy season"; (C) Daba *dəbavɛ̧ya* "rainy season", Gidar *dúbbya* id.; (E) Kera *dubueni* "rain".

40. El(n) *uhi* "stone, rock" (HK 1202) /// AA **ʔuḫay-* > Berb: Menacer *uqi*, Iznacen *awqi* "stone" // Ch: (W) Montol *oho* "rock"; Sha *wàḥày* "mountain" or *hàw* "stone", Daffo-Butura *hayaay* pl. id., Fyer *hoó* "mountain".

IV. Dwelling, agriculture, tools & weapons, transport

41. El(o) *aapi-* "to plough" (HK 15) /// AA **hVb-* > ? Sem: Arab *habba* "to cut" // Eg(OK) *hb* "plough" (EG II, 485), Copt *hebbe, hebi* (Vy 288) /// Sum *apin* "plough" (Blažek & Boisson 1992, 22).

42. El(A) *bardu* "street" (HK 147) /// AA **bVr[d]-* > ? Cush: (E) Konso *pora* "road" (*p-* < **b-* regularly) // Omot: Nao *buřun*, Gimira *bod* "road" // Berb: Ahaggar *abariid*, Ayr *abər*, Augila *tabaruṭ* "road" // Ch: (W) Buli *bədàna*; (C) Hwona *banda*; (E) Mubi *bɔ̀dɔ̀l*, Migama *bótól* "way, road".

43. El(A) *basram* "hammer" (HK 126, 395) /// AA **bVrVs-* > Cush: (E) Oromo *burrisa*, Konso *purriša*; Dobase *purruša* "heft".

44. El(A) *elpi* "saw" ? (HK 395) /// ? AA **ʔalb-* > Cush: (E) Oromo *albee* "knife"; Gollango *albeni* "sickle".

45. El(o) *halki* "sweet", (A) *hal(?)-la(?)-ki* "honey" (HK 599-600) /// AA **ḥVl-* > Sem **-ḥluw* > Arab *ḥalā* "to be sweet, pleasant", *ḥulw* "sweet", Syr *ḥ^{e}lī* "to be sweet" // Eg(D 19) *ḥ3hrg* /*ḥlg*/ "to be glad, to rejoice", (Gr) *ḥrg*, Demotic *ḥlk* "sweet", Copt *hloϥ* "to be sweet" (EG III, 34; Vy 298) // ? Berb: Tamasheq *sulleg^{y}et* "to be sweet" (caus.) (Vy 1934, 85).

46. El(m) **hwel-/*hyel-* "portal, gate; yard" (HK 683,657,666,391,393,1201) /// AA **^{c}/ġul-* > ? Sem: Aramaic ^{c}*ll*, Arab *ġalla* "to enter" // Eg(Pyr) ^{c}*3* "(leaf of) door", (D 20) ^{c}*ry.t* "Türbalken", (Pyr) ^{c}*r(r)w.t* "gate" (EG I, 209-11, 164) // Cush: (E) Oromo *ula* "gate, portal" // ? Ch: (W) Siri *hwuli* "doorway".

47. El(A) *hipis* "ax", cf. *atti hipis* "Spitzhacke" (HK 668, 395) /// AA **ḫVb(-)Vs-* > Eg(Pyr) *ḫbs* "hacken" (cf. *ḫb3* id.), (BD) *ḫbsy.t* "Hacke" (EG III, 256) // ? Berb: Ahaggar *eġwes* "tailler, retrancher ce qu'il y a de trop".

48. El(n) *menu-me* "roof" ? (HK 915) /// AA **min-* > Cush: ? (N) Beja *mine* "to create"; (C) **ŋən-* "house"; (E) **min-/*man-* id. (Sa 1982, 45), cf. Elmolo *míndu* "roof"; (S) **min-* "house" (Eh 1987, #436) // Eg(Pyr) *mn(n)w* "fortress" (EG II, 82; Takács p.c.) // Ch: (W) Bole-Tangale **mina* "hut" (St 247) /// Dr **maṉ-ay* "house" (DEDR 4776).

49. El(m) *mit[i]* "needle" (HK 939) /// AA **mut^{c}-/*mit^{c}-* > Cush: (E) Elmolo *midi*, Dullay *mut(u^{c})^{c}o*, Gedeo *muta* "needle".

50. El(m) *ulhu* "chamber", *ulhi* "dwelling-place; Tempel-Cella"; (A) *ulhu* "house, palace, yard" (HK 1216-7) /// AA **ʔuhl-* > Sem **ʔuhl-* > Akk *ālu(m)* "village, city", Ug *ʔahl* "tent, dwelling", Hbr *ʔohel* "tent, shelter" etc. (Cohen 1970, 10) // Eg(D 19) *ỉh3y.t*, (D 18) *ỉhw* "camp, stable" (EG I, 118) // Cush: (E) Oromo *oll-aa* "village", Arbore *ʔollah* "id., neighbors".

V. Fauna

51. El(A) *bagimaš* "halbwüchsig bei weiblichen Kleinvieh" (HK 118) = *bakemaš* "intermediate (female) goat" (Hallock 1969, 673) /// AA **bagg-* or **bag^{c}-* (Co #390) > Cush: (N) Beja *bok* "he-goat"; (C) **bäg(g)-* "sheep" > Geez *baggə^{c}* "sheep, ram" // Berb: Ahaggar *abag^{y}ug^{y}* "young ram", Iullemiden *abbegug* "ram". Note: El *bagimaš* can be a compound of a proper El word for "goat" and Sum *maš, máš* "he-goat, kid, gazelle" (IK 657,660), cf. also *maš* "son, boy" (IK 657).

52. El(A) *duma* "wolf" (HK 356) /// AA **duʔm-* or **dumm-* > Sem: Akk *dumām-* "gepard", Arab (Yemen) *dimm, dumm* "cat" (Ls 136) // Cush: (S) **du?uma* "leopard" (Eh 1980, 347) // Omot: Koyra *damaa* "jackal" // Ch: (W) **dami* "leopard; hyena" (St 171, #240); (E) Bidiya *ḍèmḍèm* "lynx".

53. El(A) *it-ra-an-ku /dranku ?/* "donkey" (HK 794) /// AA ?: Cush: (C) **dəq^{w}ar-* "donkey" // Ch: (E) Mubi *ḍ ùrgúl*, Migama *ḍùrkúl*, Dangla *ḍúrkur*, Bidiya *ḍurtikilo* id.

54. El(m) *hidu* "sheep" (HK 656) /// AA **^{c}iid-/*^{c}idd-* ? > Cush: (E) Saho ^{c}*eydo/^{c}iido* "sheep" (coll.), Asa-Lisan ^{c}*iddoo* pl. "sheep", Elmolo *édi* "goat" /// Dr **iṭ* - "to herd (esp. goats)"> Malayalam *iṭayan* "a caste of shepherds and cowherds", Brahui *hiḍing* "to gather, herd" (DEDR 450; MA 97: El+Dr).

55. El(m) *kumaš* "he-goat" (HK 512); cf. *áš* "cattle, herd" (HK 84) /// AA **kVm-* > Cush: (C) **kəm-* "cattle" // Ch: (W) Bole-Tangale **k^{w}amV* "cow" (St 246).

56. El(A) **kar(r)-/*kur(r)-* "lamb" (HK 441,442,531) /// AA **karr-* (Co #181) > Sem **karr-* "(male) lamb" // ? Cush: (E) Dasenech *kor-ac* "male kid" // Berb: Qabyle *ikərri*, Ahaggar *ekrer* "ram", Sus *ikru* "goat" // Ch: (W) Saya *kərò*, Wandai *karò* "sheep".

57. El(m) *lakpilan* "horse" (HK 811); ? < **laki-[i]pilan*, cf. *laki-* "to travel" (HK 806, 811), comparable with Beja *lagi* "road"; Qwadza *lagalako* "path, road" (Eh 1987, #316) /// ? AA: Sem **ʔib(i)l-* "camel" (Cohen 1970, 3) // ? Eg *ỉb3w* "Barbary sheep" (Fa 15; Takács p.c.: Eg+Sem) /// Dr **ivuḷi* "horse" (DEDR 500). Note: The domesticated horse (Equus caballus) was not introduced into South Asia until after 2000 BC. McAlpin 1981, 147 judges that Dr **ivuḷi* must refer to onagar (Equus hemionus). On the other hand, the domesticated horse was introduced into Sumer just from West Iran / Elam in the beginning of the 3rd mill. BC (Brentjes).

58. El(A) *putu & pitu* "kid" (HK 237,226) /// AA **pVḫ(V)d-* > Sem: Akk *puḫadu* "lamb, kid", Ug *pḫd* "lamb" (Gordon 1965, 467) // Berb: Ahaggar *eifed* "ram", Ayr *äyfəḍ* id. (Prasse 1974, 21).

59. El(A) *tila* "calf" (HK 329) /// AA **ṯaly-* > Sem **ṯalay-* "young of sheep, goat, antelope" (Ls 590) // Cush: (E) **ḍal-* "to beget" (Sa 1982, 123), cf. Sidamo *ḍala /ṭala* "she-donkey" // Berb: Iullemiden *ā-ḍēl* "calf". Note: Cf. also Hurrian *Tilla* "a bull (of Teššub)" (Laroche, *RHA* 35, 1977[79], 266).

60. El(A) *zamama* "bird" = "Geflügel" ? (HK 1280) /// AA **cum-an-* > Sem: Akk *summatu* "dove", Arab *summān* "quail" (AHw 1058) // Eg(Pyr) *smn* "goose" (EG IV, 136) // ? Berb: Ahaggar *a-jjam* "sp. ostrich" // ? Ch: (W) **ziman-* "ostrich" (St 190).

61. El(A) *zibar-* "camel" (HK 1288) /// AA **[z]VbVr-* > Cush: (C) Bilin *dabra* "bullock, Stier zum pflügen"; (E) Som *dubeer* "decrepit pack-camel". Note: The oldest discovery of the domesticated camel (Camel bactrianus) is known from Central Iran (Tepe Yahya, 4500-3800 BC) (Brentjes). Its spread is attested from East Iran (Shahr-i-Sokhta, 2700 BC) and Indus valley (2300 BC) (Banti 1993, 186). On the other hand, the dromedary (Camelus dromedarius), probably originating on the Arabian peninsula, was depicted in Mesopotamia before 3000 BC and in Egypt early in the 3rd mill. BC (Brentjes). The age of the presence of camel in Ethiopia and Somalia is discussed by Banti 1993, 193-9. The East African camel was imported from South Arabia. The similarity of the Elamite and Cushitic words certainly does not represent common heritage. If not accidental, it can be explained only as a result of a cultural diffusion.

VI. Flora

62. El(n) *ahiš* "pasture-land" (HK 34) /// AA **ʿ/ʔawis-* > Cush: (E) **ʿawiš-* "grass" (Sa 1979, 44,45,47) // Omot: She *oš* "cane, Bambusa abyssinica" // Ch: (W): NBauchi **awasi* "grass" (Skinner 1977, 24); (C) Ga'anda *ušẹnna*, Masa *usna* id.; (E) Bidiya *ʔàwso*, Sokoro *ússii* id.

63. El(m) *par* "seed, offspring" (HK 148) /// AA **pVr-* (Cohen 1947, #367) > Sem: Akk *pēru* "fruit", Hbr *pᵉrī* id., *pārāh* "to bear fruit", ? Arab *wafara* "to be numerous, fruitful" // Eg *pry* "to give birth" (Ward, JNES 20, 1961, 36-7: Sem + Eg) // Cush: (N) Beja *firi* "to bear offspring, fruit", *faar* "blossom, flower, seed, bud"; (C) **fər-* "to flower, fruit; grain" (Eh 1987, #184).

64. El(o) *huk* "wood" (HK 686,689,714) /// AA **haq-/*ḫak-* ? > Cush: (E) Afar *hak*, Saho Irob *ḫak* "branch", (HE) **haqqa* tree, wood" // Omot: Koyra *akkaa* "tree"; Ubamer *aqa*, Banna *haaqa*, Bako *(a)haka* etc. id. // ? Berb: Ahaggar *éké*, pl. *ikéwen* "root".

65. El(o) *husa* "stem, stick, wood, tree, forest" (HK 702-3) /// AA **ʿiç̣ -* > Sem **ʿiṣ́ -* "tree, wood", cf. Akk *iṣu*, Arab Daṭina *ʿaḍa*, *ʿuḍah* (Ls 1987, 57) // Eg (Med,BD) *ḏ̲ʿʿ* "branch" (EG V, 535) // Cush: (N) Beja *'aḍa* "pole, long stick"; ? (E) Afar *ḥaḍaa* "tree", *ḥàḍḍa* "stick" // ? Ch: (C) Mandara *háazlà* "tree".

66. El(m) *malu* "wood" (HK 864) /// AA **mal-* > Ch: (W) Bolewa *mala* "forest", Gera *màalà* "bush" // Berb: Senhaja *amalu* "oak".

VII. Adjectives

67. El(n) *hazza -* "big" (HK 592-3, 653) /// AA **ʿaʒ-* > Sem ** ʿ-z-z* "to be strong, mighty" (AHw 269-70; Ls 1987 81) ? Eg *ʿḏ̲* "to be safe, vigorous, prosperous" (EG I, 237) // ? Cush: (S) Mbugu *-'ezá* "long, tall" (Eh 1980, 275) // Omot: Benchnon *ez-at-* "to become big", *ez-ats-* "to make big".

68. El(A) *kara* "old" (HK 437-8) /// AA **gary-* > Sem: Arab *ğārin-* "to be worn out (clothes), be trained (beast)" // Cush: (E) **ger^{c}-* "old" (Black 1974, 20); (S) Alagwa *garmo*, pl. *gari* "old man", *garaʔo* "old woman" // Ch: (W) Hausa *girme, girmaa* "to be older than" /// Dr **kiṯ-* "old" (DEDR 1579).

69. El(m) *meli/u-* [*weli/u-*?] "(for) a long time" (HK 912, 918) /// AA **w[a]ly-* > Eg(Pyr) *w3y* "to be far", Copt *we(i)* id., (Pyr) *3wy* "to be long", (MK) *w3ḥ* "to be long (in time)" (EG I, 245, 255,9; Vy 1983, 230) // Berb: Ahaggar *alu* "to be large" (Co 1947, #513 adds also Arab *waliya* "to be near").

70. El(o) *mer* "powerful" (HK 910) /// AA **mVr-* > Sem **m-r-r* "to strengthen" (Segert 1984, 193) // Eg *mr* "strong" (Ward, JNES 20, 1961, 36: Sem+Eg).

71. El(n) *purna* "brown" (HK 242) /// AA **buʔr-* > Cush: (E) **boʔr-* "yellow, brown, red" (Sa 1982, 39); cf. Rendille *bóran* "(dark-)brown", Arbore *burrí* "red" // ? Ch: (E) Bidiya *baar* "to become red", *barga* "red".

72. El(n) *riša-/ir(i)ša-* "big" (HK 774,779-80,1041) /// AA **riʔs-* > Sem **raʔiš-* "head" - cf. Geez *r-ʔ-s* "to rise above, become chief" (Ls 1987, 458) // Eg(Med) *3ys* "brain" (EG I, 2).

73. El(n) *sir* "heavy, rich" (HK 1087,1089,1090) /// AA **s[u]r-* > Sem: Akk *ešēru*, Hbr *yašár* "to be straight", Arab *sarā* (= *s-r-w*) "to be brave, manly, noble, be firm" (Albright, JAOS 47, 1927, 212: Sem+Eg) // Eg(Pyr) *wsr* to be strong" (EG I 860) // Cush: (E) **šor-* "rich" (Sa 1979, 33) - add Boni **suur-* "good" (He 1982, 110).

74. El(A) *teman-* "evening" (HK 317) /// AA **tVm-/*ṭVm-* > Sem: Arab *ʔaʔṭama* "devenir sombre" // Eg: Copt *thómtəm* "to become dark" (Vy 1934, 43: Copt+CCush), derived perhaps from Eg *ḥtmtm* (Vy 1983, 316) // Cush: (C) **tem-* "to be dark"; (HE) **t/ṭum-* "darkness" // Omot: Wolaita *tuumoo* id., Shinasha *tuumaa* "night" (Do 1973, 53-4).

VIII. Adverbs, conjunctions & particles

75. El(m) *am* "now" (Hallock 1969, 666; HK 14,48,51,56) /// AA **ʔam(m)-* > Sem **ʔam-/*ʔim-* "if" (Cohen 1970, 22; Ls 1987, 22-3) // ? Eg(Pyr) *m(y)* "how, if" (EG II, 1,36; Vy 1983, 105) // Cush: (C) Bilin *emmáa, immáa* "nun denn, also"; *e/imáanaa* "time; earlier"; (E) **ʔamm-(an-)* "time" (Do 1973, 132; Black 1974, 157; Sa 1979, 25) // NBerb **am* "how" (Prasse 1972, 230: Eg+Berb).

76. El(n) *da* "also, yet, then" (HK 245) /// AA **dV* > Cush: (C) Bilin, Qwara *-dii* "together with"; (E) Som *-daa* 'emphatic particle' // Ch: (W) Angas *da* "also" // Berb: Libyan *d* "and, together with", Ahaggar *əd* "with; and" (Prasse 1972, 225).

77. El(n) *hira* "for" (HK 668) /// AA: Eg(Pyr) *ḫr* "for, (up)on, through", orig. "face" (EG III, 132).

78. El(o) *in-* "not" (HK 754, 757-8) /// AA **ʔin-* > Sem: Akk *yānu / yaʔnu* "isn't", Ph *ynny* id., Hbr *ʔayin, ʔeen*, Ug *in, yanu* "there is not", Arab *ʔin*, Geez *ʔen* (Ls 1987, 27) // Eg(Pyr) *n*, (MK) *nn* "not" (EG II, 195) // Cush: (E) Som *an* "not", Oromo *en-* id., Afar *-inn* (in negative verbal constructions *mV*-verb-*inn*).

79. El(m) *sap* "copy", (A) "how" (HK 1054-5; Hallock 1969, 751) /// AA **ʒap-* > Sem: Arab *zaffat* "once", *zafatāni* "twice" (Ember, ZÄ 51, 1913, 119: Arab+Eg) // Eg(OK) *zp* "times" (= "mal") (EG III, 435).

IX. Numerals

80. El(o) *ki* "one" (HK 459,465,468-9) /// AA **kawy-* > Eg(Pyr) *kyy*, pl. *kwy* "another" (EG V, 110), cf. *ky...ky* "one...other" (Fa 285) // Cush: (N) Beja *kwo* "unit"; ? (C) Bilin *kaayaa* "empty; only, alone, solitary" or Qwara *kaw* "to be in front, be first"; (E) **kaww-* "one; alone" (Sa 1979, 44) // Omot: Dizi *qȯy*, Sheko *k(w)oy* "one"; ? Gonga **ikk-* id.

81. El(n) *mar(i) /=wari* ?/ "two" (HK 860,876,880) /// AA **wary-* ? > Cush: (N) Beja *wari* "other"; (C) **wäri* "or" (Eh 1987, #578: N+CCush) - cf. Dahalo *watte* "other" (Elderkin) vs. *watte* "or" (Eh) // Ch: (W) Hausa *waari* "a pair" /// Dr **wāṟ-oṇṭi* "next year" (DEDR 5375), cf. **onti* "time, a turn" (DEDR 979) ? Note: If El *m-* is original, there is an alterative cognate in Dr **maṟu/i* "another, following, next, again" (DEDR 4766). Al'bedil' 1986, 47 tries to prove the presence of this word in the language of the Proto-Indus script on the basis of a partial homonymity with Dr **maṟa-* "hero" (DEDR 4764).

82. El(A) *ziti* "three" (HK 1305) /// AA ?: Sem: Akk *šīzum, šizû* "Drittel-Elle" (AHw 1254) derivable from **šiḏḥ-*, besides Sem **šidš- & *šiḏṯ-* "6" > **šiḏ+šiḏ* ? = 3+3? - cf. Ug *ṯlṯt w ṯlṯt* "6" = "3+3", *tt tt* "12" = "6+6" (Gordon 1965, 503, 501) // Berb: **saḍīs & *sūḍus* "6" (an old reduplication ?) // ?Ch: (W&E) **sidu* "6". Note:

There are suggestive parallels in Nilo-Saharan: Berta *sittijini* "3"; Kunama *saate*, Ilit *satte*; Berti *soti* id. The position of ECush **s/šaz(zi)ḥ-* "3" & **sizḥent-* "8" is not clear, cf. also Mao (Omot) *t/siyaz-* and Tirma (Surma) *sisi, dizi* 3". A total puzzle is Soqotri (SSem) *ḍádeheh* "3" recorded by Bittner against the usual form *ŝilɛ / ŝaᶜtɛ* m./f. by Johnstone.

83. El(n) *kut-* "all" (HK 548, 565) /// AA **gudd-/*gutt-/*gud-t-* ? (Greenberg 1963, 59) > Sem: Arab *ǧadda* "to be great, rich, honored" // Cush: (N) Beja *gud* "to be much, many, full, big"; (C) Awngi *gud* "good"; (E) **gudd-/*guud-* "big", cf. Som *giddi* "whole" (Eh 1987, #37) // Omot: Wolaita *guute* "much" // Ch: (W) Kofyar *gᵂɛɛt* "many"; (C) Higi *gutàgəy* id. // Berb: Zwara *a-guda* id.

X. Verbs

84. El(m) *bakka-* "to find" (HK 106) /// AA **bVḳ-* > Sem **b-q-w* "to seek, try" (Cohen 1976, 78) // Cush: (E) Som *beeq- & beeg-*, Oromo *bek* "to know" // Omot: Benchnon *beqᵃ* "to see", Basketo *biq-*, Kafa *beg(g)-* id., caus. *beqq-* "to know".

85. El(n) *bera-* "to read" (HK 185-6) /// AA **ba[ʔ]r-* > Sem **b-ʔ-r* "to explain" (Cohen 1976, 41) // Eg(MK) *sb3* "to teach", (late) "to learn", cf. (Pyr) *sb3.w* "teacher" (EG IV, 84-5) with a frozen causative prefix *s-*? // Cush: (E) **bar-*, cf. Afar *bar-is-* "to teach", *bar-it-* "to learn", Oromo Borana *bar-aḍ-* "to understand" (Black 1974, 164); Dahalo *ɓar-* "to know" (Eh 1980, 135) /// Dr **paṟ-ay* "to speak, say, utter" (DEDR 4031; MA 105: El+Dr) or **peer-* "speech" (DEDR 4439).

86. El(m) *da-/ta-* "to lie, put" (HK 248,254-5,262) /// AA **-d-ᶜ* > Sem **(w-)d-ᶜ* "to put" (Ls 1938, 125) // Cush: (N) Beja *di'* "to make, be ready, put", caus. *daa-s* // Ch: (C) Musgu *da* "to do, build", Logone *ḍə* "to put, stand" (Do 1973, 186-7).

87. El(o) *du-* "to get, take, keep" (HK 346-7,356-7) /// AA **-d-w/y* > ? Sem *ndy* > Akk *naduu* "to throw (away), put down", Ug *ndy* "to throw/drive away, remove", postbib. Hbr *ndy* "to banish" (AHw 705; Segert 1984, 193) & Sem *wdy* > Ug *ydy*, Hbr *yāḏā* "to throw", Arab *ʔawdā* "to take away", Geez *wadaya* "to put, add, lay, place, throw" (Ls 1987, 605) // Eg *ỉdy, wdy, ndy* "to give, put, throw" (Ember 1930, 116: Sem+Eg) // Omot: Kafa *dew-* "(ap)portare; consegnare, pagare; (ri)tornare".

88. El(m) *duna/i-* "to give" (HK 361-2) /// AA **d[i]n-* > Sem: Akk *(i)din* "give!", *nadānu(m)* "to give", *tadānu* "to give (back)", Hbr *nādān* "gift", Arab *dūna-ka* "you have here, take!", *dyn* "to give oncredit" // Eg(Pyr) *wdn* "to make sacrifice", Copt *wōten* id. (EG I, 391; Vy 1983, 239; Ember 1930, 115: Akk+Eg) // ? Ch: (W) Ron: Sha *ndi* "to give". Note: There is a voiceless variant in WSem: Hbr, OAram *ntn*, Ph, Ug *ytn* "to give, pay" (Aistleitner 1965, 139-40).

89. El(m) *halpu/i-* "to beat, kill", *halba* "died" (HK 595-6, 605-7) /// AA **ḫ-b-l* > Sem **ḫ-b-l* "to ruin, destroy" (AHw 302; Ember 1930, 81: Sem+Eg) // Eg(Pyr) *ḫb3* "to destroy" (EG III, 253).

90. El(o) *hani-* "(to) love" (HK 616-8) /// AA **ḥ[a]n-* > Sem **ḥnn* "to grant, favor, long for" (Aistleitner 1965, 105) // Eg(Pyr) *ḥn* "to grant, favor", Demotic *xn*, Copt *hne-*, *hna-* "to want" (EG III, 101; Vy 1983, 519; Ember, ZÄ 51, 1913, 119: Sem+Eg) // ? Cush: (E) Konso *heen-* "to want", *heenaa* "love" /// Dr **aṉ-/*aṇ-* "love, friendship" (DEDR 330; MA 97: El+Dr).

91. El(o) *hapu* "to hear" (HK 578-9,589-90,622) /// AA **hub-* > Cush: (E) **hub-* "to know, be sure", cf. Afar *-ob-* "to hear" (Sa 1979, 38,40,41); Dahalo *huɓ-aṯ-* "to know" (Eh 1980, 336).

92. El(m/n) *hil-/hul-* "to rob, loot" (HK 660,673,691) /// AA **ᶜul-* > Sem **ᶜ-w-l & *ġ-w-l* > Hbr *ᶜalwā* "disobedience", Arab *ᶜāla* (*ᶜ-w-l*) "to deviate from the right course", Geez *ᶜalawa* "to rebel, distort, reject, pervert" & Ug, OSA *ġlyt* "wrath", Arab *ġ-w-l* "to take unexpectedly, destroy" (Ls 1987, 78) // Eg(OK) *ᶜw3y* "to rob, steal; robber; one robbed" & (MK) *ᶜwn* "to rob, deceive" // Cush: (N) Beja *ol, ul* "to strike"; (E) **ᶜol-* "war" (Do 1973, 162; Black 1974, 243; He 1978, 99; Eh 1987, # 492) /// Dr **ula-* "to become diminished, terminated, die, perish" (DEDR 671) /// Sum *hul* "bad, evil; to ruin, destroy; enemy" (IK 446-7). Note: There are hopeful cognates in IE: Hittite **halla-/ hallu-* "to lay waste, ruin, savage", Greek *óllūmi* "I destroy", Lat *ab-oleō* id. (Puhvel J., Hittite Etymological Dictionary, Vol. 3. Berlin-New York: Mouton de Gruyter, pp. 13-4,49-50 reconstructs IE **A_2ʷl-n-*, rejecting the connection with Hittite *hulla-* "to smash, quash, defeat" - p.368).

93. El(m) *huma-* "to take, rob" (HK 691-4) /// AA **ḫVm-* > Sem **ḫ-m-y* > Akk *ḫamū* "to immobilize, paralyze", Geez *ḫamaya* "to tie, shackle, chain" (Ls 1987, 262-3) // Eg(Pyr) *ḫm^{c}* "to seize" (Ember 1930, 36: Sem+Eg) and/or Eg(Pyr) *ḫmy* "to reach, touch, grasp" (EG III, 281-2).

94. El(o) *hutta-* "to work, make", (linear script) *hut* "work" /// AA: Sem **ḫ-t-ʔ* > Akk *ḫatū* "to vanquish", Ug *ḫtʔ* "to disappear", Arab *ḫataʔa, ḫatā, ḫaṭṭa* "to be carried away" (Segert 1984, 187).

95. El *kani*: (n) *kanira* "friend", (A) *kani* "I would like" (HK 431-2) /// AA **k-h-n* > ? Sem **kāhin* "priest, prophet, augur" (Ls 1987, 278) // Cush: (N) Beja *kehan* "to love, honor, venerate"; (C) Xamir *(i)ekan* "to love, want", Awngi *ənkan-* id.; (E) Afar-Saho *kahan-* "to love" /// ?Dr **kaṉi-* "to ripen grow tender", cf. Tamil *kaṉivu* "ripeness, love, compassion" (DEDR 1408). Note: The semantic dispersion is plausible, cf. Sem **m-n-y* "to love, desire, wish" and "to count" (Ls 1987, 352-3).

96. El(o) *kat* "place, throne", (A) *kata/u-* "to live" (HK 410, 452-4) /// AA **kVt-* > Cush: (N) Beja *keti* "to seat, put together"; (S) Alagwa, Burunge *kiti* "settlement" // Omot: Chara *kot-it-*, Kafa *kot(e)-*, Mocha *kota-* "to sit" (Do 1973, 246).

97. El(o) *kul(l)a-* "to ask, call" (HK 508,560-2) /// AA **q-w-l* > Sem **q-w-l* "to say, speak" (Ls 1987, 426) // Cush: (N) Beja *kwali* "singing"; (E) Som *qayli* "to cry, shout", Yaaku *-qɛɛl-* "to sing"; (S) Qwadza *ḳwaʔaliko* "voice"; ? Mbugu *-kaláʔe* "to shout" (Eh 1980, 268; Id. 1987, #513) // Ch: (E) Jegu *kol-* "to name, call", ?Gabin *guaal* "to speak".

98. El(n) *kuni-/kini-* "to become, realize" (HK 515,564;477- 8) /// AA **k-w-n* (Co 1947, #196) > Sem **k-w-n* "to be, become" (Ls 1987, 299-300) // Cush: (C) Bilin *k^{w}în* "to be, exist"; (E) Afar-Saho *kii(n)* id. // Berb: Ahaggar *eken* "to do, arrange".

99. El(o) *kura-* "to burn, roast" (HK 518-9) /// AA **kawr-* > Sem **kawr-* "stove, furnace" (Ls 1987, 300) // Cush: (LE) **kar-* "to boil" (Do 1983, 134: Sem+ECush).

100. El(o) *kusi-/kuši-* "to build, bear (children)" (HK 538-9,541) /// AA **k[u]s-* > Cush: (N) Beja *kwsi* "to mean; make, create", *kwása* "heritage" // Berb: Shilh imper. *kkas*, fact. *yəkkus*, Ahaggar *kusät* : *yəkkus* "to inherit" (Rössler, Oriens 17, 1964, 206: Beja+Berb).

101. El(n) *kuti-* "to carry, bring" (HK 505,546-7) /// AA **guty-*? > Cush: (C) Xamir *g^{w}it-* "to pull"; (LE) **giit-* id. (He 1978, 83; Do 1973, 245).

102. El(o) *li-* "to give; gift" (HK 818,820-1,826-8) /// AA **li-* > ? Sem: Arab (Ta^{c}iizz) *mā ʔallāš* "there is not", Amhara *ʔall-* "to be" (Co 1947, #20) // Cush: (C) Qwara *lee* "to give"; (E) **leh-* "having" (Sa 1979, 41; Do 1973, 164-5) < **li-hay* "to be by" ?; cf. Afar-Saho *-ell-* "to come to have, possess", Elmolo *li* "to possess"; (S) Qwadza *lo?-* "to give" (Eh 1980, 388) // Ch: (C) Logone *lii* "to be"; (E) Mokilko *ʔél-* "to give" // Berb: Ahaggar *äl* : *yəla* (**l-ʔ-y*) "to have, possess" (Rössler, Oriens 17, 1964, 207: Som+Berb).

103. El(o) *muri-* "to grasp", (A) *ma rri-/*m[o]rri-* "to seize, hold, occupy" (Hallock 1969, 726; HK 885,905,953) /// AA **mVr-* > Cush: (N) Beja *meri* "to take, get, find, seize", *maray* "to take, rob"; (HE) **moor-* "to steal" (Hudson 1989, 143); ? (S) Mbugu *mmarú* "load" (Eh 1980, 154).

104. El(m) *mirri-* "to smear" (HK 923,935) /// AA **mVr-* > Sem: Arab *m-r-ḫ* "to smear" // ? Eg(OK) *mrḥ.t* "fat" (EG II, 111), if it is not derived from *wrḥ* "to smear" (EG I, 334) // Cush: (E) **moor-* "fat, sealing-wax" (Sa 1982, 147) // Ch: (W) **ma/iwra* "fat, butter" (St 1987, 233) /// Dr **mer-* "to smear, rub" (DEDR 4709) and/or **meṟuk-* "to smear, plaster; wax" (DEDR 5082).

105. El(m) *na-* "to say" (HK 975,981,990) /// AA **nV* > Ch: (W) Fyer *ne*, Bokkos *ni* "to say"; Sura *nɛɛ*; Bolewa *ni na*, Tangale *nɛɛ*; SBauchi: Burrum *ne*, Kir *no* id. (St 1987, 235).

106. El(m) *ni-* "to be" (HK 100o-1; Hallock 1969, 738) /// AA?: Sem: Arab *ʔinn, ʔanniya* "l'être", Amhara *na-* 'copula', Gafat *yän-* "to be" (Co 1947, #445) // Cush: (C) Bilin, Qwara *en*, Dembea *in* "to be"; (E) Afar-Saho *na* id. // Ch: (W) Hausa *na, ne* "is, are, was, were".

107. El(n) *para/i-* "to go; arrive, come; draw, pull" (HK 146, 149) /// AA **s-p-r* (with the causative prefix **s-* ?) > Sem: Akk *šapāru* "to send", Arab *sāfara* "to travel" (Albright, JAOS 47, 1927, 228: Sem+Eg) // Eg(Pyr) *spr* "to come, arrive, reach" (EG IV, 102) /// Dr **pari-* "to run, go out, move" (DEDR 3963; MA 104: El+ Dr).

108. El(m) *suku-* "to destroy, exterminate" (HK 1102) /// AA **suḳ-* or **sawḳ-* ? // Cush: (C) Bilin *suuk-*, Xamir *sooq-/sawq-* "to kill (cattle)"; (E) **šoq-* "to beat, hit" (Sa 1979, 33) // Omot: Zala, Chara, Yemsa *šuk-*, Kafa *šuk(k)-* "to kill (cattle)" (Do 1973, 115).

XI. Pronouns

The correspondences between the Elamite and Dravidian pronouns and nominal and verbal personal endings are among the most convincing parts of McAlpin's attempt to demonstrate their genetic relationship. Let us compare them with Afroasiatic :

A. Middle Elamite (McAlpin 1981; Grillot-Susini 1987)

	Nom.-dat.	accusative	Genitive	possessive	verbal	nominal	A=Achaem.
sg 1	*U*	*un* (A) *unan(-ku)*	(A) *unina/i* (A) *u*	(A) *u-ri*	*-h*	*-k*	*-ki / -ka*
2	(o) *ni / nu*	*nun*		(A) *-ni*	*-t*	*-t*	*-ti*
3 dat. dat.	*Ir* (A) *hi* (A) *ha-* *kaš*	*ir* (A) *ir / in*		*-e* (A) *-e(-ri)*	*-š*	*-r*	*-ra*
pl 1	*Nuku / nika*		(A) *nukami*	*-nika*	*-hu*	(?) *-unka*	*-un*
2	*Num / nun*				*-hti*		
3	*api*	*apin / apun*		*-api-e* (A) *-pini*	*-hši*	*-p*	*-pi / -pa*

B. Dravidian (*) / Brahui (McAlpin 1981; Andronov 1980)

	Nominative	oblique	possessive	appellative	verbal	Brahui
sg 1	**yān / ī*	**yan / kan*	**y- / -ka*	**-en*	**-ku*	*-v, -r, -ṭ*
2	**nī(n) / nī*	**nin / nē*	**ñ- / -ne*	**-i & *-ay*	**-ti*	*-s*
3	**tān / tēn*	**tan / tēn*	**t- / -te*	m. **-anrə*; n. **-(a)t*	**-anrə*	*-k, -e, -s*
pl 1 in	**nām / nam*	**nam / nam*		**-aṭ*	**-t-aṭ*	*-n*
1 ex	**yām*	**yam*		**-em*	**-t-um*	
2	**nīm / num*	**nim / num*		**-ir*	**-t-ir*	*-r*
3	**tām / tēn*	**tam / tēn*	*/ -tā*	mf. **-ar*; n. **-av*	**-ar*; **-ap*	*-r, -s, -ō*

C. Afroasiatic (Blažek 1995)

	Subject	absolutive	dative	accusative	perfect	imperfect
sg 1	**(ʔan-)ʔaku*	**ya /*yi /*yu*	**yiwāši*	**yiwāti*	**-ku*	**ʔa-*
2m	**(ʔan-)ta*	**ku*	**kuwāši*	**kuwāti*	**-ta*	**ti-*
2f	**(ʔan-)ti*	**ki*	**kiyāši*	**kiyāti*	**-ti*	**ti-*

3m	**šuwa*	**šu*	**šuwāši*	**šuwāti*	**-a*	**yi-*
3f	**šiya*	**ši*	**šiyāši*	**šiyāti*	**-at*	**yi- / *ti*
pl 1inclusive	**(ʔan-)muni*	**na/*ni /*nu*			**-na*	**ni-*
1exclusive	**(ʔan-)ḥina/u*					
2m	**(ʔan-)tunwa*	**kunwa*			**-tunwu*	**ti-...-ū*
2f	**(ʔan-)tinya*	**kinya*			**-tinya*	**ti-...-na*
3m	**šunwa*	**šunwa*				
3f	**šinya*	**šinya*				

The empty cells represent forms which are unreconstructible for more than one branch of Afroasiatic.

It is evident that some pronominal stems and even fragments of complete paradigms correspond. These cognates can be complemented by other pronominal roots:

109. El(m) *akka* "that, which" (rel.) (HK 37) /// AA **ʔak(k)-* > Sem: Akk *akkāʔi*, Hbr *ʔēk*, Aram *ʔakam* "how", *ʔaka* "why", Ug *ik*, Mehri *ūkō* id. // Cush: (E) Oromo *aka* "like", *akka* "that, in order to; like" // Omot: Yemsa *akka* "thus, how ?" // Ch: (W) Ngamo *aka* "how"; SBauchi: Guruntum *akwaa* "who", *akaa* "what", Geji *yèk* id.; (C) Ngala *yaku* "who".

110. El(A) *-be*: *hu-be* "that" ("jenes, das") where *hu-* corresponds to mEl *hu/i* "this, dies" (HK 681,676,654) /// AA **bV* > Cush: (N) Beja nom. *bɛ-n*, acc. *bɛ-b* "that" // Omot: Shinasha *bi/bo*, Kafa *bi/bonoosi* 'sg./pl. of demonstr. stem', Yemsa *baas/bar/baasɔ* m./f./pl. id.

111. El(m) *-ka /i* "I am (now)" (HK 459, 464-5) /// AA **ʔaku & *ʔan-ʔaku* "I", **-ku* '1sg perf.' /// Dr **-ku* '1sg of verbal conjugation', cf. Brahui *kan* "me" & *-ka* "my" (see above: A, B, C).

112. El(A) *kaš* "him" (dat.) (HK 418,450) /// AA **kV* > Cush: (C) **-γ^{w}*: **la-γ^{w}* m. vs. **la-ti* f. "one"; (E) **ku* (subj.), **ka* (acc.) "this" (Sa 1982, 111) // Omot: Ari *koona* "this" : *koona-see* "that". Note: El *-š* may be a relic of old dative appearing in such the forms as **yiwāši, *kuwāši* (Sem: Akk & Eblaic; C+HECush - see Blažek 1991).

113. El(o/m) *ni/nu* "thou" (HK 996,1004,1006) /// AA: NOmot **ni(-ni)* (subj.), **ni(-na)* (obj.) "thou" /// Dr **nī(n)* "thou" etc. (see above).

114. El(o/m) *nika / nuku* "we, us" (HK 1000,1003,1008,1011), where *-ka/u* can correspond to *-ka/i* "I (am)" or with *-ku* in (A) *unan-ku* "me here"; (A) *-un* 'ending of 1pl of nominal conjugation' /// AA **na /*ni /*nu* "we, us, our" etc. (see above) /// Dr **nām* "we", cf. Brahui *-n* 'verbal ending of 1pl'.

115. El(A) *hi-su* "he self" (HK 669), cf. *hi* "this" /// AA: Cush: (C) Qwara *išuu*, Bilin, Xamir *šuu* "self"; (E) **ʔis-* "self" (Sa 1979, 34,35; Id. 1982, 107).

116. El(m) *-š* 'ending of 3sg of verbal conjugation' /// AA **šuwa* "he", **šiya* "she" etc. (see above) /// Dr: Brahui *-s* '3sg verbal ending'.

117. El(m) *-t* 'ending of 2sg of verbal & nominal conjugation' /// AA **ti & *ta* 'pronoun & ending of 2sg' (see above) /// Dr **-t* '2sg of verbal conjugation'.

118. El(o) *u*, (A) *hu* "I, me" (HK 1195,676) /// AA **[ʔ]yu* 'personal pronoun of 1sg' > Sem (Akk & Eblaic) **y[iw]ā-s̲i/ti* 'dat./acc. of indirect case of a pronoun of 1sg' // Eg *i̯w*, (later) *wy* "I" (dependent series) // Cush **yi/*yu* 'object case of a pronoun of 1sg' // Ch: (W) Hausa *-wa* 'possessive pronoun of 1sg'; (C) Kotoko **nta-wu* (indep.), **[ʔ]wu* (obj.), **-wu* (poss.), Gidar *-wu* (poss.), Musgu **-u* id.; (E) Sokoro *-u*, Mokilko *-o* id. // Berb **īw* 'pronoun of 1sg of indirect object (simple)', **ū/w* (compound) /// Dr: Brahui *ī* "I" and/or *-v* 'verbal ending of 1sg'.

Abbreviations: **AA** Afroasiatic, **Akk** Akkadian, **Arab** Arabic, **Aram** Aramaic, **Berb** Berber, **C** Central, **Ch** Chadic, **Cush** Cushitic, **Dr** Dravidian, **E** East, **Eg** Egyptian (**BD** Book of Dieds, **D** 18/19 18/19 Dynasty, **Gr** Greek period, **M/N/OK** Middle/New/Old Kingdom, **Med** Medical texts, **Pyr** Pyramids texts), **El** Elamite (**A** Achaemenid, **m** middle, **n** new, **o** old), **H** Highland, **Hbr** Hebrew, **IE** Indo-European, **L** Lowland, **N** North, **NP** personal name, **Omot** Omotic, **OSA** Old South Arabian, **Ph** Phoenician, **S** South, **Som** Somali, **Sum** Sumerian, **Syr** Syrian, **Ug** Ugaritic, **W** West.

The preliminarily established phonetic correspondences

Afroasiatic	Elamite	Numbers of entries
**b*	b	2, 16, 22, 26, 42, 43, 51, 61, 84, 85, 110
	p	14, (26), 39, 41, 44, 47, 57, 71, 89, 91
**p*	p	6, 7, 27, 58, 63, 107
**d*	d	52, 54, 76, 86 (*d/t*), 87, 88
	t	6, 14, 19, 39, 53, 58
**t*	t	13, 74, 96, 117
**ṭ*	t / -tt-	59, (74) / 5
**ǯ*	z	30
**č*		
**ǩ*		
**ʒ*	s / -z-	8, 79 / 67
**c*	z	60 ?
**ç*		
**ĉ*		
**ç̂*	s	65
**s*	s	9, 38 (*s / š*), 73, 100 ?, 108
	š	11, 12, 62, 72
**š*	š	112, 116
**ŝ*		
**g*	g	20, 51
	k	47, 68, 83
**k*	k	36, 55, 56, 80, 95, 96, 98, 99, 100, 108, 111
**ḳ*	k / -kk-	3, 4, 97 / 84
**ġ*	h	27, 92 ?
**ḫ*	h	15, 18, 28, 40, 45, 47, 89, 93, 94
**ᶜ*	h / -∅ -	19, 46, 54, 62, 65, 67, 92 / 86
**ḥ*	h	9, 77, 90
**h*	h	33, 34, 50, 91
**ʔ*	∅	1, 15, 17, 20, 21, 31, 40, 44, 50, 75, 78, 109
**y*		

**w*	m	24, 69, 81 ?
**m*	m	5, 23, 25, 48, 52, 55, 66, 70, 74, 75, 93, 103, 104
**n*	n	2, 8, 23, 26, 31, 35, 48, 78, 88, 90, 95, 98, 106, 113, 114
**l*	l	1, 16, 22, 24, 32, 33, 36, 37, 45, 46, 57, 59, 66, 69, 92, 97, 102
**r*	r	4, 7, 11, 17, 28, 34, 42, 56, 63, 68, 70, 72, 73, 85, 99, 103, 104

Note: The borrowed cuneiform orthography does not differentiate voiced and voiceless stops (cf. Hittite).

Acknowledgement: I had a chance to study the Elamite language and its relatives thanks to a grant from the Alexander von Humboldt Foundation during my stay in Bonn and Cologne, Germany, in 1993-94.

References:

AAL *Afroasiatic Linguistics.*

AHw *Akkadisches Handwörterbuch*, I-III, bearb. W. von Soden. Wiesbaden: Harrassowitz 1965-81.

AION *Annali di Istituto orientale di Napoli.*

Aistleitner J. 1965. *Wörterbuch der ugaritischen Sprache*$_2$. Berlin: Akademie-Verlag.

Albright W.F. et al. 1976. The evidence of language. In: *The Cambridge Ancient History*$_3$, Vol I, Part 1. Cambridge University Press, pp. 122-55.

Al'bedil' M. F. 1986. Tipy protoindijskix nadpisej. In: Knorozov J.V. (ed.) *Drevnie sistemy pisma. Étničeskaja semiotika.* Moskva: Nauka, pp. 36-68.

Andronov M.S. *The Brahui Language.* Moskva: Nauka.

Banti G. 1993. Ancora sull'origine del camello nel corno d'Africa: osservazioni di un linguista. In: Belardi A. (ed.), *Ethnos, lingua e cultura.* Rome: Calamo, pp.183-223.

Belova A.G. 1989. Isoglosses yéménites-couchitiques. Paper presented at II *International Congress on Cushitic and Omotic Languages.* Turin (Nov 1989).

Black P. 1974. *Lowland East Cushitic: Subgrouping and Reconstruction.* Yale University Ph.D. Dissertation.

Blažek V. 1989. Omotic lexicon in Afroasiatic perspective: body parts. Paper presented at II International symposium on Cushitic and Omotic languages. Turin (Nov 1989).

Blažek V. 1992a. The new Dravidian-Afroasiatic lexical parallels. In: *Nostratic, Sino-Caucasian, Austric and Amerind,* ed. V. Shevoroshkin. Bochum: Brockmayer, 150-65.

Blažek V. 1992b. (Review article of) Ruhlen M. 1987. *A Guide to the World's Languages.* Stanford University Press. Asian and African Studies 1, 76-92.

Blažek V. 1994. Elephant, hippopotamus and others: some ecological aspects of the Afroasiatic homeland. *Asian and African Studies* 3, 196-212.

Blažek V. 1995. The microsystems of personal pronouns in Chadic, compared with Afroasiatic. In: *Studia Chadica et Hamito-Semitica* (Frankfurt, May 1991), eds. D. Ibriszimow & R.Leger. Köln: Köppe, 36-57.

Blažek V. & Bengtson J. 1995. Lexica Dene-Caucasica. *Central Asiatic Journal* 39/1, 11-50 & 39/2, 161-164 .

Blažek V. & Boisson C. 1992. The diffusion of agricultural terms from Mesopotamia. *Archív orientální* 60, 16-37.

Boisson C. 1989. Sumerian / Nostratic / Sino-Caucasian isoglosses. Ms.

Brentjes B. 1973. *Die Erfindung des Haustieres*. Leipzig-Jena-Berlin: Urania.

Co Cohen M. 1947. *Essai comparatif sur le vocabulaire et la phonétique du chamito-sémitique*. Paris: Champion.

Cohen D. 1970, 1976. *Dictionnaire des racines sémitiques* I, II. Paris-La Haye: Mouton.

DEDR *A Dravidian etymological dictionary*$_2$, by T. Burrow & M. B. Emeneau. Oxford: Clarendon Press.

Diakonoff I.M. 1981. Earliest Semites in Asia. Agriculture and Animal Husbandry According to Linguistic Data (VIIIth-IVth Millennia B.C.). *Altorientalistische Forschungen* 8, 23-74.

Diakonoff, I.M. 1985. Elam & Media. In *The Cambridge History of Iran*, vol. 2: *The Median and Achaemenian Periods*, ed. I. Gershevitch, 1-24, 36-148. Cambridge: University Press.

Diakonoff [D'jakonov] I.M. 1991. Afrazijskie jazyki. In: *Jazyki Azii i Afriki* IV, 1: *Semitskie jazyki*. Moskva: Nauka, 5-69.

Do Dolgopol'skij A. 1973. *Sravniteľno-istoričeskaja fonetika kušitskix jazykov*. Moskva: Nauka.

Dolgopolsky A. 1983. Semitic and Cushitic sound correspondences and cognate sets. In: Segert S. & Bodrogligeti A. (eds.), *Ethiopic Studies*. Wiesbaden: Harrasso- witz, pp. 123-42.

Edzard D.O., Farber G. & Sollberger E. 1977. *Die orts- und Gewässernamen der präsargonischen und sargonischen Zeit*. Wiesbaden: Reichert.

EG Erman A. & Grapow W. 1971. *Wörterbuch der ägyptischen Sprache*, I-VI. Berlin: Akademie-Verlag.

Eh Ehret Ch. 1980. *The historical reconstruction of Southern Cushitic phonology and vocabulary*. Berlin: Reimer.

Ehret Ch. 1987. Proto-Cushitic Reconstruction. *Sprache und Geschichte in Afrika* 8, 7-180.

Ember A. 1930. *Egypto-Semitic Studies*. Leipzig: Asia major Verlag.

Fa Faulkner R.O. 1981. *A Concise Dictionary of Middle Egyptian*. Oxford: Griffith Institute.

Fähnrich H. Das Sumerisch und die Kartwelsprachen. *Georgica* 4, 89-101.

Fairsewis W.A.1992. *The Harappan Civilization and its Writing. A Model for the Decipherment of the Indus Script*. Oxford: IBH Publishing Co.

Gordon C.H. 1965. *Ugaritic Textbook*. Roma: Pontificium Institutum Biblicum.

Grillot-Susini F. 1987. *Éléments de grammaire élamite*. Paris: Recherche sur les Civilisations.

Greenberg J.H. 1963. *The Languages of Africa*. Bloomington: Indiana University Press.

Hallock R.T. 1969. *Persepolis Fortification Tablets*. Chicago: Oriental Institute Pubs. 92.

He Heine B. 1978. The Sam languages. The history of Rendille, Boni and Somali. *AAL* 6/2, 23-115.

Heine B. 1982. Boni Dialects. In: *The Non-Bantu Dialects of Kenya* X. Berlin: Reimer.

Hiebert F.T. & Lamberg-Karlovsky C.C. 1992. Central Asia and the Indo-Iranian Borderlands. *Iran* 30, 1-16.

Hinz W. 1964. *Das Reich Elam*. Stuttgart: Kohlhammer.

Hinz W. 1969. *Altiranische Funde und Forschungen*. Berlin: de Gruyter.

HK Hinz W. & Koch H. *Elamisches Wörterbuch*. Berlin: Reimer.

Höyrup J. 1992[94]. Sumerian: The descendant of a proto-historical creole? *AIΩN. Annali del Dipartimento di Studi del Mondo Classico e del Mediterraneo Antico*. Sez. ling. 14, 21-72.

Hudson G. 1989. *Highland East Cushitic Dictionary*. Hamburg: Buske.

Hüsing G. 1916. Völkerschichten in Iran. *Mitteilungen der anthropologischen Gesellschaft in Wien* 44, 199-250.

IF *Indogermanische Forschungen*.

IK Hübner B. & Reizammer A. 1985. *INIM KIENGI* II. *Sumerisch Deutsches Glossar*. Marktredwitz: Selbstverlag.

Illič-Svityč 1971,1976,1984. *Opyt sravnenija nostratičeskix jazykov*, I-III. Moskva: Nauka.

JAOS *Journal of the American Oriental Society.*

JNES *Journal of Near East Studies.*

Klein E. 1987. *A Comparative Etymological Dictionary of the Hebrew Language.* New York-London: McMillan.

König F.W. 1965. *Die elamischen Königinschriften.* Graz: Archiv für Orientforschung, Beiheft 16.

Kovalev A.A. & Militarev A.Ju. 1994. Sumerians and Semites: An Encounter of the Equipotential Cultures. Paper presented at 6th International Congress on Hamito-Semitic Languages. Moscow April 1994.

Lamberg-Karlovsky C.C. 1986. Further traces on the earliest history of the Iranian Plateau. In: Masson B.M. (ed.), *Drevnie civilizacii Vostoka.* Materialy II Sovetsko-amerikanskogo simpoziuma. Taškent: FAN, pp. 166-71.

Lamberg-Karlovsky C.C. 1986. Third millennium structure and process: from the Euphrates to the Indus and from the Oxus to the Indian ocean. *Oriens Antiquus* 25, 189-219.

LRDIV *Lingvističeskaja rekonstrukcija i drevnejšaja istorija Vostoka.* Moskva: Institut vostokovedenija / Nauka.

Ls Leslau W. 1938. *Lexique soqotri.* Paris: Klincksieck.

Leslau W. 1987. *Comparative Dictionary of Ge^{c}ez (Classical Ethiopic).* Wiesbaden: Harrassowitz.

Lukas, J. 1970. *Studien zur Sprache der Gisiga.* Glückstadt: J.J. Audustin.

MA McAlpin D.W. 1981. *Proto-Elamo-Dravidian: The Evidence and its Implications.* Philadelphia: Transactions of American Philosophical Society 71/3.

MeE *Mesopotamie et Elam. Actes de la XXXVIème Rencontre assyriologique internationale* (Ghent 1989). University of Ghent 1991.

Meriggi P. 1969a. Zur Lesung und Deutung der proto-elamischen Königinschriften. *Bibliotheca Orientalis* 26, 176-177.

Meriggi P. 1969b. Altsumerische und Proto-elamische Bilderschrift. XVII. *Deutscher Orientalistentag* (Würzburg, Juli 1968). Wiesbaden: Steiner (*ZDMG*, Suppl. I), 156-163.

Meriggi P. 1971. *La scrittura proto-elamica*, I: *La scrittura e il contenuto dei testi.* Roma: Accademia Nazionale dei Lincei.

Meriggi P. 1977. Iscrizioni proto-elamiche dell'Iran orientale. *Kadmos* 16, 1-4.

Militarev A.Ju. 1984a. Afrasian-Sumerian parallels. Ms. [A shortened Russian version 'Afrazijsko-šumerskie leksičeskie paralleli' was published in LRDIV 1, 58-61]

Militarev A.Ju. 1984b. Sovremennye sravniteľno-istoričeskoe afrazijskoe jazykoznanie: čto ono možet dat' istoričeskoj nauke? *LRDIV* 3, 3-26.

Militarev A.Ju. 1989. Asian home for Cushitic? Paper presented at II International Congress on Cushitic & Omotic Languages. Turin, Nov 1989.

Militarev A.Ju., Pejros I.I. & Šnirel'man V.A. 1988. Metodičeskie problemy lingvoarxeologičeskix rekonstrukcij ėtnogeneza (1. Problema proisxoždenija afrazijcev. 2. Nekotorye problemy ėtnogeneza dravidov). *Sovetskaja ėtnografija* 1988/4, 24-38.

Militarev A.Ju. & Starostin S.A. 1984. Obščaja afrazijsko- severnokavkazskaja kuľturnaja leksika. *LRDIV* 3, 34-43.

Militarev A.Ju. & Starostin S.A. 1994. Names of body parts in Afro-Asiatic and Sino-Caucasian. Paper presented at 6th International Congress on Hamito-Semitic Languages, Moscow April 1994.

Militarev A.Ju. & Šnirel'man V.A. 1984. K probleme lokalizacii drevnejšix afrazijcev (opyt lingvo-arxeologičeskoj rekonstrukcii). *LRDIV* 2, 35-53.

Oates J. 1991. Babylonia and Elam in Prehistory. *MeE* 23-26.

Parpola A. 1994. *Deciphering the Indus Script.* Cambridge: Cambridge University Press.

Pokorny J. 1959. *Indogermanisches etymologisches Wörterbuch.* Bern & München: Francke.

Prasse K.-G. 1972-4. *Manuel de grammaire touarege (tahaggart)* I-III, IV-V, VI-VII. Copenhague: Akademisk Forlag.

Rashidi, R. 1983. The Kushite origins of Sumer and Elam. *Ufahamu* 12/3, 215-233.

RHA *Revue hittite et asianique.*

Sa Sasse H.-J. 1979. The consonant phomemes of Proto-East-Cushitic (PEC): A first approximation. *AAL* 7/1, 1-67.

Sasse H.-J. 1982. *An Etymological Dictionary of Burji.* Hamburg: Buske.

Schmandt-Besserat D. 1986. Tokens at Susa. *Oriens Antiquus* 25, 93-117

Schretter M. 1990. *Emesal-Studien.* Innsbruck: IBKW 69.

Segert S. 1984. *A Basic Grammar of the Ugaritic Language.* Berkeley-LA-London: University of California Press.

Selz G.J. 1991. "'Elam' und 'Sumer'" - Skizze einer Nachbarschaft nach inschriftlichen Quellen der vorsargonischen Zeit. *MeE* 27-43.

Skinner N. 1977. The Northern Bauchi Chadic Languages. *AAL* 4/1, 1-49.

St Stolbova O.V. 1987. Sravnitel'no-istoričeskaja fonetika i slovaŕ. In: *Afrikanskoe istoričeskoe jazykoznanie.* Moskva: Nauka, 30-268.

Steve M.-J. 1992. *Syllabaire elamite. Histoire et paleographie.* Neuchatel - Paris: Recherches et Publications.

Tosi M. 1986. The archaeology of early states in Middle Asia. *Oriens Antiquus* 25, 153-187.

Trokay M. Les origines du dieu elamite au serpent. *MeE* 153-161.

Vajman A.A. 1972. O svjazi protoélamskoj pis'mennosti s protošumerskoj. *Vestnik drevnej istorii* 1972, 124-133.

Vallat F. et al. 1993. *Les noms géographiques des sources suso-élamites.* Wiesbaden: Reichert.

Vy Vycichl W. 1934. Hausa und Ägyptisch. *Mitteilungen des Seminars für Orientalische Sprachen* 37/3, 36-116.

Vycichl W. 1961. Diminutiv und Augmentativ im Berberischen. *ZDMG* 111, 243-253.

Vycichl W. 1983. *Dictionnaire étymologique de la langue copte.* Leuven-Paris: Peeters.

Wo Woelfel D. 1965. *Monumenta Linguae Canariae.* Graz: Akademische Druck.

ZÄ *Zeitschrift für ägyptische Sprache und Altertumskunde.*

Zarins J. 1992. The early settlement of Southern Mesopotamia: A review of recent historical, geological, and archaeological research. *JAOS* 112, 55-77.

ZDMG *Zeitschrift für Deutschen Morgenländischen Gesellschaft.*

ZES *Zeitschrift für Eingeborenen Sprachen.*

Zvelebil K.V. 1985. Review of McAlpin 1981. *JAOS* 105, 364-372.

Zvelebil K.V. 1985a. The body in Nilgiri tribal languages. A contribution to areal linguistic studies. *JAOS* 105, 653-674.

Zvelebil K.V. 1990. *Dravidian Linguistics. An Introduction.* Pondicherry: Institute of Linguistics and Culture.

NEAR EAST (3000-2500 BC): THE DISTRIBUTION OF KNOWN LANGUAGES

Map by Václav Blažek

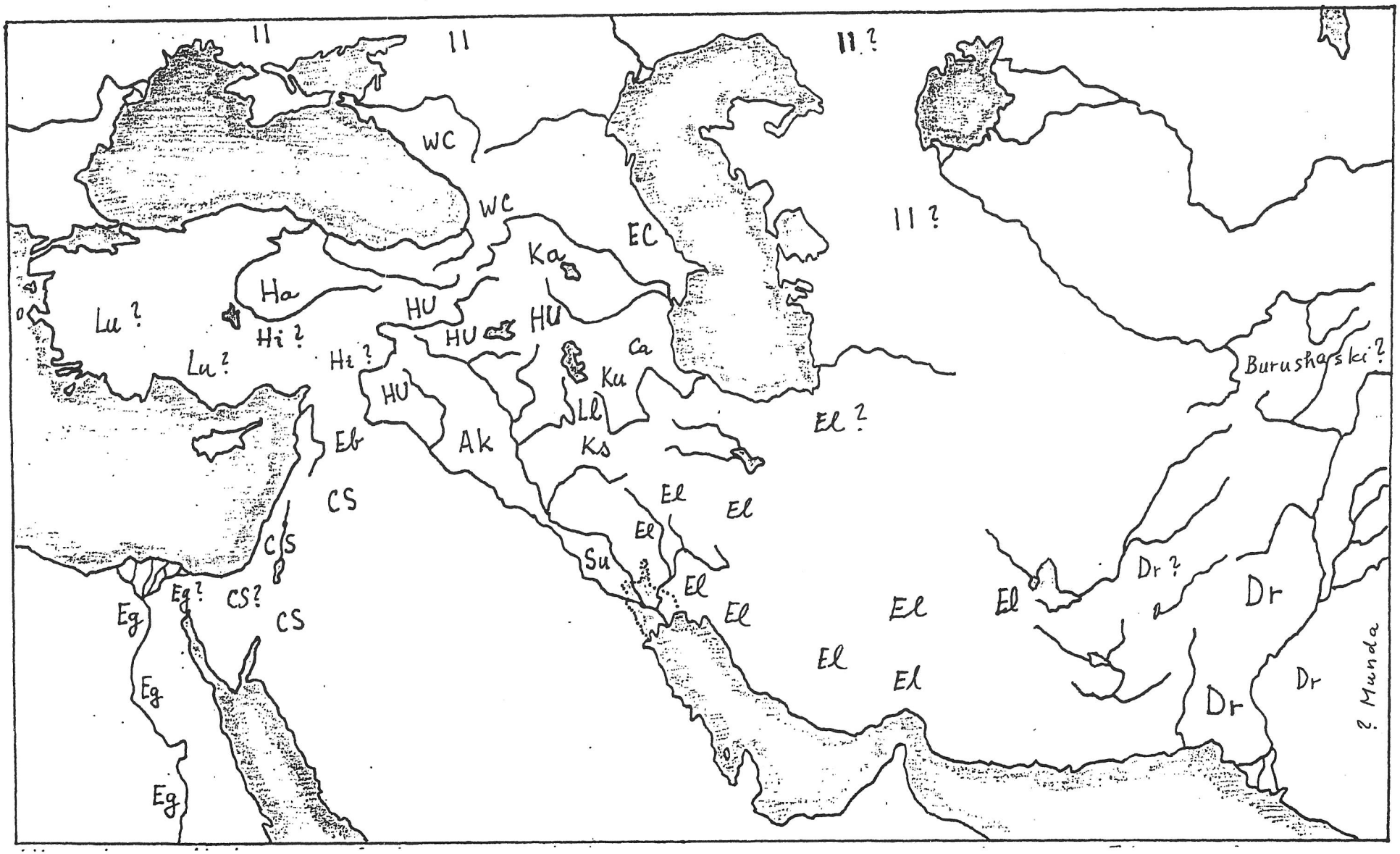

Abbreviations: **Ak** Akkadian, **Ca** Caspian, **CS** Central Semitic, **Dr** Dravidian, **Eb** Eblaic, **EC** East Caucasian, **Eg** Egyptian, **El** Elamite, **Ha** Hatti(an), **Hi** Hittite, **HU** Hurro-Urartian, **II** Indo-Iranian, **Ka** Kartvelian, **Ks** Kassite, **Ku** Kutian, **Ll** Lullubean, **Lu** Luwian, **Su** Sumerian, **WC** West Caucasian

Elamite Royal Inscriptions
in the Linear Script B: 23rd Century B.C.

Inscription A: from a stone block with an Akkadian translation; published in 1905.

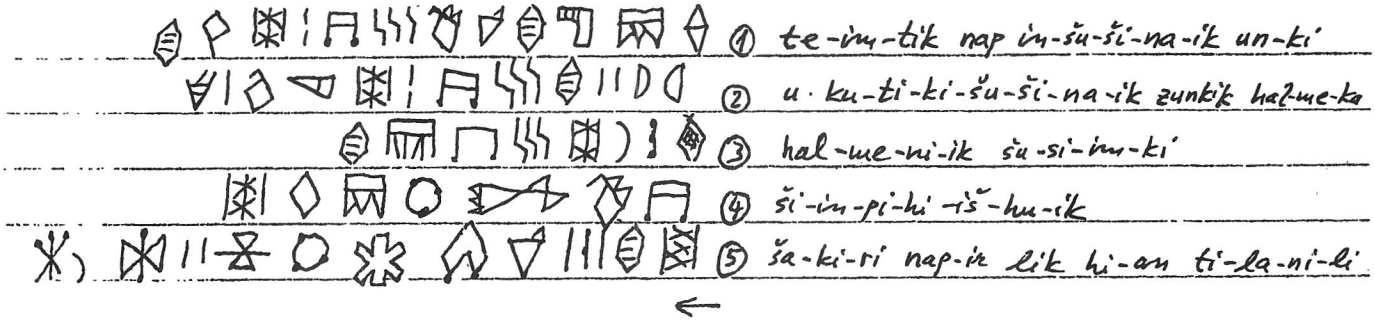

(1) To the Lord, the god Inšušinak, this wooden post
(2) I, Kutik-I(n)šušinak, the king of countries
(3) a provincial heir from Susa
(4) of Šinpi-hiš-huk
(5) son, I have brought to the god as a dedication for the temple

Inscription D: from a stone snake; published in 1908.

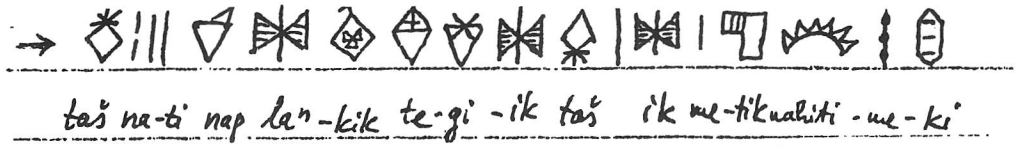

"Help, lady! With mediation of a deity send the divine presence – help!
With mediation of the votive gift I am a victor over the Sun-God."

Inscription Q: from a silver vase discovered near Persepolis in 1966.

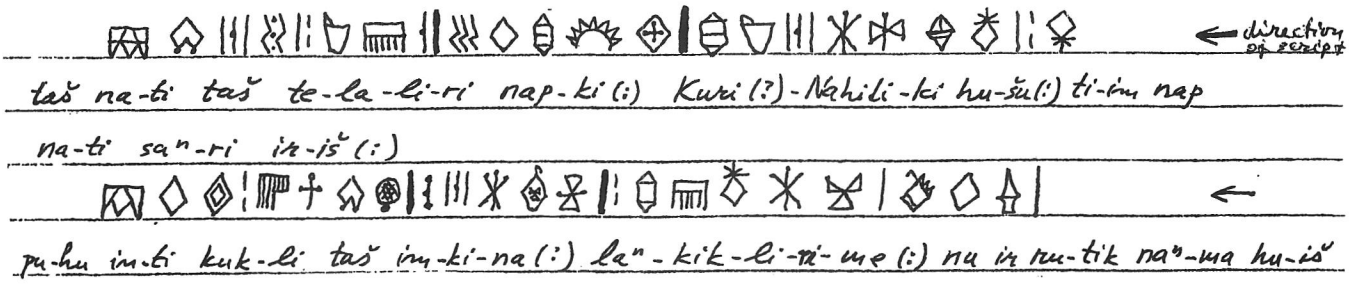

"Help, lady, help! A donor of a victim drink for the deity, Kuri-Nahiti, I am. Bringing vengeance and blessing, Divine Lady, appear! Let us remain awarded your affection, to a staff of the temple! Help! Dedicate, thou, a guide of the divine closeness, this bowl to them as a chosen day by day!"

Note the different directions of script: Inscriptions A and Q read from right to left, Inscription D from left to right.

Interpretation after Walther Hinz

Thanks to Václav Blažek

On the Genetic Affiliation of the Elamite Language

George Starostin
Russian State University for the Humanities

Introduction: The Elamite language has long been considered a particularly irritating "white spot" on the ever increasing language map of the Ancient Near East and Mesopotamia. While most of the cuneiform languages discovered in those territories throughout the last two centuries have turned out to be of Semitic origin (Akkadian, Ugaritic, etc.), Indo-European origin (Hittite and other Anatolian languages), or Caucasian origin (Hurro-Urartian and possibly Hatti), Elamite, as well as its neighbor, Sumerian, presents no obvious connections with any of the aforementioned families.

Until recently, the most widespread and heavily supported hypothesis about the genetic relationship of Elamite has been the "Elamo-Dravidian" theory, which suggests that Elamite is most closely related to the Proto-Dravidian language and should even be grouped together with it in a single Proto-Elamo-Dravidian (PED) family. This idea, having originated as early as the mid-Nineteenth century – it was even mentioned in the pioneering work of Robert Caldwell on Dravidian linguistics (Caldwell 1856) – found its main supporter in David W. McAlpin, whose works on the subject (McAlpin 1974; McAlpin 1975; and particularly PED) practically shaped the entire theory in its modern form. In his works, McAlpin presented and explicitly described a large number of language features that are common to the different stages of the Elamite language, on one hand, and the reconstructed system of Proto-Dravidian, on the other. The main emphasis from the very beginning has been placed on the similarity between the Elamite and Dravidian morphological system; however, a set of phonological correspondences and a certain number of lexical comparisons have also been suggested.

On the surface, the "Elamo-Dravidian" theory seems rather convincing: indeed, the number of similarities between the two 'branches' cannot be explained by sheer coincidence. Consequently, the theory has been embraced by multiple researchers, mainly among specialists in ancient languages of the Near East (cf., for instance, Diakonoff 1979) as well as specialists in long range comparison.

Recently, however, an alternate theory of the Elamite relationship has been put forward by Václav Blažek (Blažek 1999). Having expressed a particular concern about the lack of credible lexical comparisons between Elamite and Dravidian (while at the same time never discarding the morphologic evidence), Blažek suggests a close relationship between Elamite and another huge language family, namely, Afroasiatic. Contrary to McAlpin, Blažek does not focus as much on the comparison of the Elamite and the Afroasiatic grammatical systems as he does on lexical evidence; his article quotes more than a hundred lexical correlations between Afroasiatic and Elamite, which is quite a significant number if we consider the relative scarcity of the known Elamite lexicon.

Blažek, however, does not view his theory as 'opposed' to McAlpin's; as he writes himself, he does not 'exclude a remote relationship with Dravidian', and essentially sees no major obstacles in grouping all three families together.

That said, the evidence presented by both McAlpin and Blažek certainly cannot be viewed as a final, totally convincing stage of establishing a certain genetic relationship. Instead of solving the problem, in fact, all these works seem to raise several additional ones. The most obvious question is – *what* exactly is necessary to firmly establish genetic relations between two different languages? This problem, well known and well-described by many researchers, still does not receive a uniform answer, and it is present in an even more complex form when we have to deal with a language as poorly described as Elamite.

Another problem is that language relationship is not an absolute value; some languages are related more closely than others, and some represent distant offshoots from branches of a single proto-language that diverged quite a long time ago. How closely, then, is the Elamite language related to Proto-Dravidian, or Proto-Afroasiatic? Does it form an 'equal' branch with other branches of those families, or does it represent a much earlier offshoot? (Even in these cases it is often hardly possible to give a straightforward answer – cf., for instance, the uncertain position of the Anatolian branch within Indo-European, sometimes regarded on par with the other Indo-European branches, sometimes joined with the other branches into a more archaic 'Indo-Hittite' family).

Preliminary evaluation of existing hypotheses

As I have already pointed out above, on the surface the Elamo-Dravidian hypothesis of McAlpin looks well backed up. His PED reconstruction is performed within the strict formal requirements of the classic comparative method, being based on regular phonetic correspondences and featuring a set of reconstructed morphological markers as well as lexical entries.

However, a more detailed analysis of McAlpin's comparisons is able to show that the similarities between the two families (branches?) are, in fact, exaggerated. Being somewhat limited by the space allowed in this article, I will only quote one major example of McAlpin's approach to morphological comparison, which is of crucial importance to his reconstruction of PED, and is, in fact, quite typical of the work in general. This is his reconstruction of the nominal declension system.

(a) For PED, McAlpin reconstructs the following cases: nominative (zero ending), accusative (**-Vn*), adessive/dative (**-əkkə*), possessive (**-a*), adnominal (**-in*), oblique/locative (**-tə*). All of these case endings have regular correlations in Elamite and Dravidian, and based on this, McAlpin proudly states that the case endings 'match as complete paradigms' (PED 112).

This can hardly be so. First of all, the functions and syntactic usage of these morphemes rarely match in both families. This may not be a major problem, as there is no special requirement for related morphologic elements to coincide in their functions in all related languages. However, a far more important problem is that the compared elements *rarely present common Elamo-Dravidian isoglosses.* Accepting the Nostratic theory that relates Dravidian to other large language families of Eurasia, such as Indo-European, Uralic, Altaic and Kartvelian, we will clearly see that most of these grammar elements are quite common in other Nostratic languages as well. Let us consider this situation in a more detailed aspect:

1) The Dravidian suffix **-Vn, *-an,* commonly used to express the accusative case, is

compared to the Elamite suffix **-n*, used to express the same case in personal pronouns (cf. *u* 'I', obl. case *un*). This is a nice match, but not an exceptional one; in Elamite this marker is clearly just a relict, while in Dravidian it is used all over the place. Note, however, the similarity of this marker with the Common Nostratic marker for the accusative case, reconstructed by V. M. Illych-Svitych as **-mA* (ND II 285). In the light of this comparison, it is interesting to note that in Old Kannada the accusative ending, besides the obvious *-an,* is also regularly featured in the form *-am.* Considering a frequent alternation of word-final resonants (cf., for instance, the irregular realization of the same ending as **-m* in some Indo-European dialects, such as Indo-Aryan or Italic, and **-n* in others, such as Hittite or Greek), one can safely assume these markers being related; the Dravidian-Elamite parallel is thus irrelevant for establishing a close relationship.

2) The Dravidian suffix of the dative case/indirect object **-kkV* is compared to the Elamite postposition *ikku, ikka* indicating movement towards an object. Again, this is not an exact match, but more significant is the fact that the Dravidian suffix also has a Nostratic etymology: in (ND I 245) it is compared to Proto-Uralic **-kkʌ/-*kʌ* (marker of the dative case) and Proto-Altaic **-kʌ* (postposition with essentially the same meaning as in Elamite). The Elamo-Dravidian comparison is thus irrelevant once again.

3) The PED morpheme **-in* is reconstructed on the basis of Dravidian **-in* (genitive marker) and Elamite *-inni* (a somewhat rare Middle Elamite ending of the genitive; note that for all stages of Elamite but the Achaemenid Elamite, "genitive" is normally restricted to denoting the 'material' out of which something is made). Again, the morpheme has a valid Nostratic etymology (ND II 314), namely, PN **-n*, a suffix used to form indirect bases of nouns and pronouns. It should be noted that the meaning of the genitive case, secondary in Dravidian (the original meaning of "indirect base formative" was still preserved in Old Tamil), is also present in Uralic, where *-n* functions as the regular suffix of the genitive in many languages. Again, the Elamo-Dravidian parallel turns out to be irrelevant.

4) McAlpin himself admits that the PED reconstruction of the 'locative/oblique' marker **-tə* is approximate, as it is based on the comparison between PD **-t-*, marker of the indirect stem of certain nouns, and Elamite *-ta/-da*, an adverbial (sic!) suffix with an approximate locative meaning. Even if the comparison can be accepted, one cannot ignore the Nostratic morpheme **da* (ND I 11), reconstructed with an approximate 'locative' meaning: Proto-Altaic *-da/-dä, -du/-dü* (locative markers), Proto-Uralic *-δa/-δä* (ablative markers), Proto-Indo-European **-d* (ablative marker), Proto-Kartvelian *-da/-d/-ad* (adessive case). Here, the matches from other Nostratic languages correlate to the Elamite meaning even better than the Dravidian comparison.

5) The only comparison that does not seem to have an exact Nostratic parallel is PED **-a*, the marker of the possessive case (PD **-ă,* the genitive suffix, and Middle Elamite *-(y)a*, similar in use to *-inni,* cf. above). It goes without saying that such a weak match cannot serve as a convincing argument for establishing a close relationship or a 'match of complete paradigms' between Elamite and Dravidian.

It should, in fact, be noted that the very term 'complete paradigm' is rather questionable

when applied to either the Proto-Dravidian, or particularly the Elamite, language state. Apart from these case endings, Dravidian has certain other declensional morphemes which cannot always be successfully etymologized on Dravidian territory. As for the Elamite noun, it does not even have a real 'paradigm' to speak of, as the only *cases* in Elamite are the accusative (used exclusively for pronouns) and the genitive *-na,* which seems to be an Achaemenid innovation. We can only speak of postpositions fulfilling the functions of cases, whereas for Proto-Dravidian we can with certainty reconstruct a full-fledged case system.

Such an approach is rather typical for the morphological comparisons offered in PED. It should be noted, though, that I am in no way trying to *reject* any of them as false, coincidental, etc.; the only thing that I want to state is that, even if all of them are based on solid ground, they cannot qualify as evidence for a special Elamo-Dravidian relationship. At best, they present Elamite as a potential candidate for the Nostratic macro-family; at worst, similar morphemes could also be found in *other* Eurasian macro-families (some of them definitely have parallels in Afroasiatic, for instance), making the comparison even more feeble and indecisive than it is.

It gets even worse when we get to analyzing the proposed set of lexical cognates between Elamite and Dravidian. As I already said, the established phonetic correspondences mostly work, although we could certainly question the probability of some of the changes - like, for instance, the development of PED **š-* to Proto-Dravidian **t-* before a subsequent apical liquid and to Proto-Dravidian **0-* in other cases (PED 90). However, a close analysis of the 'cognates' reveals a striking lack of semantic similarity between the compared entries; out of eighty proposed comparisons, less than a third can boast a distinct semantic identity, most of them usually indicating abstract notions like 'love' or 'collect, gather'. Far more often, we are offered comparisons like Elamite *hiš* 'name' – PD **ey-* 'to know how to, understand', going back to a PED **heš-* 'to know how to'. Sometimes the comparisons can border on absurd, as PED **šin-* 'to arrive, yield' > mE *šinni-* 'to approach, arrive', achE *šinnu-* 'to come', but PDr **īṉ-* 'to yield, yean, bear' (PED 102); the Dravidian proto-form clearly means 'to bear young', and comparing it with the main Elamite word for 'approach, come' is a bit of a stretch (not to mention that the comparison involves the questionable PED phoneme **š-*).

Furthermore, some of the lexical entries presented by McAlpin could easily be explained as results of cultural interference and cross-borrowing; reconstructing PED **upat_* 'brick' on the base of mE *upat* 'brick, brickwork' and Proto-South-Dravidian **uppar-* 'bricklaying, plastering' (PED 96) is, in fact, a far more dubious thing to do than to suppose a borrowing from Elamite into Proto-Dravidian.

All of the above considerations make me seriously question the validity of a special 'Elamo-Dravidian' theory. Simply put, the evidence presented by McAlpin, while definitely valid and interesting from a 'global' comparative point of view (apart from some truly dubious lexical comparisons), is not enough for establishing a separate Elamo-Dravidian language family as opposed to, say, Elamo-Uralic language family.

Turning now to the theory of V. Blažek on an Afroasiatic-Elamite relationship, it is easy to see that it has its serious drawbacks, as well. Unlike McAlpin, Blažek does not focus on the questions of morphology, which is quite understandable, considering the rather poor state of affairs in Afroasiatic reconstruction at the present time; trying to establish a joint "Elamo-Afroasiatic" morphological system would inevitably result in chaos, as among the endless sea of Afroasiatic languages it would be possible to find suitable parallels to just about any particular

Elamite morpheme.

Unfortunately, the same problem is evident in lexical comparison. Blažek approaches the lexical comparison problem with far more caution than McAlpin does, and generally, when we deal with his comparisons, both the phonetic correspondences between Afroasiatic (or different branches of Afroasiatic) and Dravidian, on one hand, and the semantic differentiation between the two branches, on the other, are quite evident and plausible. However, the one hundred or so comparisons that he quotes all have different degrees of reliability.

Thus, it goes without saying that one cannot simply bypass such interesting parallels as Elamite *el/t/* 'eye' - PAA **ʔil-* id., or Elamite *kassu* 'horn' - PAA **ḳVsw/y-* id., or the parallels between Elamite and Afroasiatic pronominal systems (which actually turn out to be just as strong as McAlpin's Elamo-Dravidian 'pronominal ties'). But too many of the proposed cognates have their own weaknesses, mainly due to their being underrepresented in Afroasiatic. For instance, parallel number 55 compares mE *kumaš* 'he-goat' to PAA **kVm-* 'cattle, cow', represented only in Central Cushitic and one West Chadic language; parallel number 66 compares mE *malu* 'wood' to PAA **mal-*, represented only in a few West Chadic and one Berber language, etc.

It goes without saying that the scarcity of material is only a testament to the relatively poor state of the Afroasiatic reconstruction in general and can in no way serve as a definite argument for lack of relationship (close or distant) between Afroasiatic and Elamite. However, it also makes the issue of the Afroasiatic-Elamite comparison itself rather unstable and dubious, not to mention that if Elamite really constitutes a separate branch of Afroasiatic, we would probably expect a far higher number of lexical parallels (considering that the Elamite dictionary of Heinz-Koch, used by Blažek in his research, contains at least a thousand identifiable Elamite roots).

All the critique presented above seems to convince me that not only is there not enough evidence to establish a direct Elamo-Dravidian or Elamo-Afroasiatic at the present time, but that it is simply a near-impossible task to establish a close relationsship of Elamite with any of the currently known families or macro-families. On an intuitive level, Elamite does not disclose any specific ties with any known languages (and one should certainly not underestimate the importance of intuitive perception of relationship); however, when we try to apply a purely scientific method, we face the usual problems that often accompany similar cases of isolated languages, most notably Sumerian: scarcity of lexical data, lengthy, unclear history of development, and "isolated language" status are serious impediments in establishing a proved relationship through strictly formal methods.

General lexicostatistic comparison

Some "preliminary" measures, however, can be taken, and one of these measures would be a tentative lexicostatistical analysis of the available Elamite data. An approximate comparison of the Swadesh 100-word-list for Elamite, on one hand, and for the most important of its neighbouring macro-families, on the other, could, if not necessarily clear the position of Elamite, at least point us in a certain direction for further research.

Below I will give a list of all Elamite words from the 100-word-list whose meanings can be more or less considered established, and try to find possible cognates for these words among the reconstructed roots of three macro-families whose relationship to Elamite, at least from a

geographical and chronological point of view, would seem most probable: Nostratic, Afroasiatic, and Sino-Caucasian. It should be noted that I support the variant of the Nostratic theory that counts Afroasiatic as a different macro-family, as well as the hypothesis that all three macro-families have a high probability of going back to a single "Eurasian" macro-family. However, these assumptions do not actually play any crucial role within the limits of this work.

Since at the present stage of studies in long range comparison it is usually extremely hard, and often impossible, to determine the exact "main" word for a certain entry in the Nostratic, Afroasiatic, or Sino-Caucasian list, the following principle will be assumed: if the Elamite root matches a root that serves or may serve as the "main" word for a certain 100-word list entry at least in one major sub-branch of Nostratic (Afroasiatic, Sino-Caucasian), such as, for instance, Dravidian or Kartvelian (or Semitic, or North Caucasian, etc.), the entry will be marked with a "+" sign, denoting an exact match, and will be included in the final count. Dubious matches (with extreme phonetic problems, underrepresented in compared families, or with semantics that do not match) will be marked with a question mark.

Thus, in entry N 12 the Elamite root *mak-* 'to eat' is considered to form a match with Nostratic, due to its having the same meaning in an archaic sub-branch of Dravidian (Kurukh-Malto) and in certain sub-branches of Altaic. However, it does not match the Afroasiatic root **muk-* due to semantic problems (in Afroasiatic, the common meaning is undoubtedly 'to suck').

Needless to say, there arise additional problems here. One of these problems is that the entire Elamite dictionary has been subjected to this analysis, with lexical entries taken from every period of Elamite, from Old Elamite (oE) to Middle Elamite (mE), New Elamite (nE) and Achaemenid Elamite (achE), which violates the principle of wordlist creation. Fortunately, an absolute majority of the entries are represented by New Elamite and Achaemenid Elamite entries, and most of the Old and Middle Elamite entries are also represented in the newer forms of Elamite. Out of all the comparisons, only four words are found in documents not younger than Middle Elamite, and since no clear lexical replacements for these words have been established in New Elamite, we can assume that they were simply not attested in that period.

Another problem is the incompleteness of the wordlist: out of the basic 100 words, only about 60 can be established for Elamite with a certain degree of assuredness. This is, however, not as relevant as it may seem, given that the final count will be given in percentage of coincidences rather than in absolute numbers.

Finally, the most difficult problem is the establishment of the very fact of relationship between the Elamite word and the correlate in the compared macro-family. It is a well-known fact that lexicostatistics and glottochronology are primarily used in determining the level of relationship between languages already *known to be related*, with an already established set of phonetic correspondences. Here, the only way to effectuate the comparison is by relying on the somewhat vague and somewhat subjective criterion of 'phonetic similarity', which may eventually result in matching genetically unrelated forms with a secondary similarity, or, more probable, in denying the matching of genetically related forms that have diverged so much they do not have any obvious phonetic similarity any longer. This, in its turn, leads to incorrect lexicostatistic results.

However, it should be noted that the main object of the comparison given below is not so much to establish a genetic relationship of Elamite with a given family as it is to delineate the *probability* of its relationship with certain language families, with 'relativity' as a key factor. It is obvious that if the principle of 'phonetic similarity' yields, for instance, twice as many matches of Elamite with Nostratic as it does with Afroasiatic, the probability of Elamite being closely

related to Nostratic becomes far higher than its probability of being closely related to Afroasiatic, etc.

Furthermore, the very critique of McAlpin's theory given above is enough to prove that Elamite *is* related, at least in some way, to some families within the huge 'Eurasian' branch. The morphological matches quoted by McAlpin, if not necessarily speaking in favor of the Elamo-Dravidian theory, are certainly enough to tie Elamite in with Nostratic; in a similar way, Blažek's Afroasiatic-Dravidian comparisons cannot be overlooked and can hardly be explained by mutual borrowings alone. It remains, then, to demonstrate the relative validity of these ties, and preliminary lexicostatistic analysis is an excellent way to do that.

All Elamite data are given according to the dictionary of Heinz-Koch (HK). Multiple sources have been drawn on for other data. For Nostratic, the primary sources of data are the works of V. M. Illych-Svitych (NE, ND). Additionally, Dravidian references and etyma are taken from (DED), with numeration given according to the number of entry in the dictionary (Proto-Dravidian reconstructions, all of which are available online as part of the "Tower Of Babel" project, are given according to my own interpretation of the PDr phonological system). Altaic etyma are for the most part drawn from the *Altaic Etymological Dictionary* by A. Dybo, O. Mudrak, & S. Starostin, currently in print and also available in the form of a WWW database. Uralic references are quoted according to the reconstructions in (Redei 1986); Kartvelian references are taken from (Klimov 1964).

Most Afroasiatic data in the article are taken from V. Blažek's article (Blažek 1994) and the dictionary of Orel-Stolbova (HSED). Additionally, I have consulted the 100-wordlists of selected Afroasiatic languages, compiled by A. Yu. Militaryov. I am also extremely grateful to A. Yu. Militaryov in person for checking out the main body of this article and helping out on certain interpretations of Afroasiatic data.

Sino-Caucasian data are for the most part taken from computer databases on Sino-Caucasian languages, compiled within the international "Tower of Babel" project; most of the actual forms can be found in NCED (North Caucasian), STED (Sino-Tibetan) and YD (Yeniseian).

Wordlists

1. "all": nE *kut-ti-na,* achE *kut-tin-na, kut-tan, kut-tan-na* (der.: mE *ku-ut-ti-na* 'altogether').

No exact wordlist matches have been found in any of the analyzed macro-families.

? Nostratic: assuming a semantic change 'much, a lot' > 'complete, all', the root can be compared to Alt. **ket'o* 'much, many, excessively', Drav. **kaṭ-* 'much, great, exceeding', also 'bitter, intense' (DED 1135).

? Afroasiatic: An alternate comparison is PHS **gid-/*gud-* 'be big, be many' (HSED 919), suggested by V. Blažek.

2. "big": achE *ir-šá-na, ir-šá-an-na,* subst. *ir-šá-ra* 'the big one = great person, chief'. In older texts usually spelled as *ri-ša-,* cf. oE *ri-ša-a-ri* 'the big one', mE *ri-ša-ar* id., etc. This probably accounts for a syllabic *r* (= **ṛša*).

+ Sino-Caucasian: a perfect match exists in Proto-East-Caucasian **iršV* 'big, large, thick'. The main NC root for 'big' seems to have been PNC **ĥăχE,* with outside Sino-Caucasian

correspondences (PY *χe? 'big', etc.). However, PEC *iršV has an exact meaning big in languages of at least two different subgroups (Avaro-Andian and Tsezi) and cannot be excluded from view despite not having obvious Sino-Tibetan or Yeniseian correlations.

McAlpin compares the form with PD *i̲ray 'great person, lord' (DED 527) > Tam. i̲rai 'anyone who is great, king, lord, etc.', Kan. e̲re 'state of being a master, master', OTe. e̲ra 'lord'. The comparison is plausible if the Dravidian form indeed goes back to a PD *i̲r-/*e̲r- and not to PD *i̲ḍ-/*e̲ḍ- (the latter variant allows me to compare it to Altaic *edV 'host, husband', with even better semantics). However, even if we accept McAlpin's comparison, it cannot be proclaimed an exact match.

In a somewhat similar manner V. Blažek compares the form to Proto-Afroasiatic *ri?s- 'head, chief' > Proto-Semitic *ra?iš- 'head', Eg. (Med) ;ys 'brain', etc. This is somewhat better phonetically than McAlpin's comparison, but very vague from a semantic point of view.

3. "blood": nE *sa-an*. The form is rare, and its meaning slightly dubious, but so far, it is the only Elamite word for 'blood' that has been possible to suggest.

+ Afroasiatic: V. Blažek offers a credible comparison in AA *ʒVn-(P-) > Eg. (Pyr.) *znf* 'blood', Copt. *snof*, Berb.: Ifoghas *azeni*, Ghat *azəni*, Ayr *azni*, Ahaggar *ahĕni* id., WChad. **zanyam* id.; isolated parallels can also be found in Omotic. Cf. also HSED 2626, with Egyptian and Hausa data, where the root is reconstructed as **ʒin-*. According to A. Yu. Militarev, the root functions as the main word for 'blood' in Egyptian and certain Berber and Chadic languages. The comparison therefore looks perfectly justified and can be qualified as an exact match.

? Nostratic: An alternate route would be to compare the root with Indo-European **es(H)ar-/*es(H)an-*, which has also been compared to Proto-Kartvelian **zisxL-* 'blood' and Proto-Altaic **sēgu* 'healthy; blood' in reference to a supposed Proto-Nostratic **Vs(V)x-* 'blood'. The Elamite comparison is extremely dubious as it would be based on the Indo-European suffixal (i.e. heteroclitic) form, but it is not altogether out of the question nevertheless.

4. "burn (tr.)": The basic form for 'burn' in mE is *li-im-ma-*, obviously a derivative of *li-im* 'fire', on which see below.

However, in certain texts we also find a verbal root *kura-* whose meaning in the Elamite dictionary is given as 'versengen' ('to sear, bake') as opposed to 'verbrennen' ('to burn') for *li-im-ma-*. It is regularly used as a 'pair-word' together with *li-im-ma-* in relation to "devastative" activities, cf. *li-ma-[a]k ku-ra-ak pa-at-pu-up ra-ap-pa-ak-na* '(the enemies) should be burnt, seared, at my feet be bound!' (HK 518), etc. In oE and mE, the word is found in the past participle form *ku-ra-ak,* as well as in the 2nd p. sg. form *ku-ra-at.* Apparently, the meaning of "versengen" was attributed to the word because of the derivative *ku-ra-am-ma, ku-ra-na* with the meaning 'furnace'. However, on a fair basis the context does not allow us to make a clear distinction, and it is not excluded that the verbal base *kura-* has to be reconstructed as the basic word for 'burn' in middle Elamite.

+ Nostratic: obviously, the most apparent comparison would be to Proto-Indo-European

g^{w}her- 'hot, to burn' (the Slavic forms, where the root is represented in its verbal form, are intransitive, but one cannot exclude the possibility of it being used with causative suffixes in Indo-European, where differences between transitive and intransitive conjugation are often extremely thin). The Nostratic root, reconstructed as **gUrʌ-* by V. M. Illych-Svitych (see ND 95) with the supposed meaning 'hot coals', is also based on a tentative Altaic **gur/V/-* 'hot coals, to enflame'. We could, however, also point out a possible comparison with Proto-Uralic **korpe-* 'to burn' (Redei 186), which further indicates that the word could have had an exact verbal meaning 'to burn' in Proto-Nostratic.

? Afroasiatic: For Nostratic **gUrʌ-* Illich-Svitych further suggests a comparison with PAA **g/w/r* 'fire, coal' > late Egyptian *ḏr* 'fire', Beja *gŭr* 'to boil, roast', etc. The meaning 'to burn' is represented in Sidamo *gir-*. For Chadic parallels with the meaning 'ashes, coal' see also Stolbova 1996, p. 67. An alternate comparison is suggested by V. Blažek, who compares the Elamite root to Proto-Semitic **kawr-* 'furnace' and East Cushitic **kar-* 'to boil'. Both comparisons, however, can hardly qualify for an exact wordlist match.

5. "claw, nail": nE *pu-ur* (found in the expression *pu-ur hw.hu-ban.a-h-pi-na ha-rák*-qa 'the fingernail of Humban-ahpi is pressed (i.e. to seal the letter)').

+ Nostratic: excellent parallel in **p/a/r/ä/* 'finger, fingernail' (ND III 362). The Indo-European (**per-, *pṛst-*) and Altaic (**para-ŋa,* new reconstruction **pʿi̯àri*) forms normally carry the meaning 'finger', but Proto-Kartvelian **pṛcxa* is the basic Kartvelian form for 'fingernail'. From the Dravidian side, the usual correspondence pointed out is **ver-al-* 'finger' (DEDR 5409), but the initial *v-* can hardly correspond to a Nostratic voiceless stop; a more probable correlate is PDR **paṟ-anḍ-* 'to scratch' (DEDR 4023), further pointing out the 'fingernail' semantics.

+ Afroasiatic: apparently, the same root can be seen in what is reconstructed as **pr-, *prs-* 'finger, fingernail' in ND III 362 and **par-* 'finger' in HSED 1953 (cf. also the corresponding entry in V. Blažek's article). The meaning 'nail' is present in Chadic (Hausa *far-če*, etc.), where it is one of the primary roots denoting the object. In ND III 362, an attempt is also made to trace Proto-Semitic **ṯupr-* 'fingernail' (Akk. *ṣupru,* Hebrew *ṣipporen*, etc.) to an original combination of the root **pr-* with a special preformative marker, but the attempt is somewhat dubious (especially considering the parallels in other Afroasiatic languages given in HSED 513). Nevertheless, the Chadic forms still give us an exact match.

6. "come": achE *ši-in-nu* 'coming', *ši-in-nu-ik* 'he comes', *ši-in-nu-ik-ni* 'he should come', etc. This seems to be the most basic word for the idea of 'coming' or 'arrival', although a couple other roots can occasionally carry a similar idea.

? Afroasiatic: Cf. PAA **saniʔ-* 'to go, run' (HSED 2197). The root is the closest in semantics and phonetics that one could find, however, it is not very reliable within Afroasiatic itself (too little material) and does not correspond to an exact match.

McAlpin compares Elamite *šinnu-* to PDR **īṉ-* 'to yield, yean, bear' (McAlpin 102); we are, however, forced to reject that comparison, since the semantic similarity is *very* vague and the

phonetic comparison involves the rather dubious Proto-Elamo-Dravidian phoneme **š-* (> Elam. *š-*, PD *0-*). Furthermore, the Dravidian root has an ideal match in Proto-Altaic **ìna* 'younger sibling', going back to a Proto-Nostratic root **īnV* 'young, bear young' of a far more reliable character.

7. "die": Elamite **halb-*, cf. nE *hal-pi-ik* 'he died', etc. The root is the same as for 'kill'; since all the possible external parallels are primarily connected with that meaning, we will discuss them under the entry for 'kill'.

8. "drink": achE *si-kaš-da* 'he had drunk'; cf. also nE *si-ki-tu-um* 'state of being drunk, drunkenness'. The verb is extremely rarely met and the meaning is somewhat dubious, but so far, it is the only known equivalent for 'drink' in Elamite.

+ Afroasiatic: cf. PAA **seḳ-* 'to drink, give a drink' (HSED 2220). The distribution of the root is not very wide, but it is one of the main roots for 'drink' in Central Chadic (PCCh **syaχwa-*). In Semitic, the root has the meaning 'give a drink' (Akk. *šaqû,* Hebrew *hišqā*, etc.), but the primary non-causative meaning may have been preserved in Ugaritic *šqy* 'drink'. Plausible comparison.

? Nostratic: cf. Proto-Altaic **sóga (~ -u-)* 'drunk, alcoholic drink'.

9. "dry": cf. achE *zí-ti-qa* 'dried' (used in conjunction with 'grapes'), also achE *zí-ut* '(dried) fodder'. Both words can account for a common Elamite root **zit-* 'dry'. However, no more or less apparent matches or even possible cognates for the root can be found in any of the surrounding macro-families.

10. "ear": nE, achE *si-ri.*

A totally mysterious root. Although it is certainly among the better established Elamite lexemes, it has no reliable cognates in the surrounding macro-families whatsoever. A very weak comparison can be found in V. Blažek's article, where he relates it to certain Central Cushitic (Waag *šər* 'to hear'), late Egyptian (*sy;* 'to recognize, know') and Central Chadic (Zelgwa *tsạrạkạ* 'to hear') forms; however, these are isolated and unclear forms with no reliable group etymologies, and even so, none of them carries the meaning 'ear'.

Likewise, within Nostratic one could compare the root with forms like Proto-Altaic **sā́ri* 'to know, feel', or Proto-Dravidian **čūṛ-* 'to see' (?), but such comparisons would not be of much use due to phonetic, semantic and distributional features.

11. "earth": mE, nE, achE *mu-ru-un.*

This word was apparently used in both the meaning 'element (soil)' and 'world/territory'. Cf. for the first meaning: *zu-ul mu-ru-un a-ak li-im* 'water, earth and fire'; for the second meaning: *ak-qa h.mu-ru-un da-áš-da* 'he who had created the Earth'.

The word itself is usually seen as a derivative of the Elamite root *mur-* with the meaning 'to

put, set in place; to sit'. The entire word-family is compared by McAlpin with PDR **ūr* 'native place, village, town' and traced back to a hypothetical PED **vur* 'place'. The comparison could be acceptable if the semantics of the root were not so vague; also, this is the only example of an Elamite *mu-* : Dravidian **ū-* correspondence, which makes it even less reliable.

On the other hand, we have a reliable Afroasiatic comparison:

+ Afroasiatic: cf. Tigrai *märet* 'earth' (Semitic), Ghadames *ta-mmur-t* id. According to A. Yu. Militaryov, the word is one of the primary roots for 'earth' in Berberic and has outside connections as well.

12. "eat": achE *mak-*.

A somewhat dubious entry, as the word is present mostly in an official meaning (cf. the usual German translations 'verzehren, verbrauchen' rather than 'essen') and used in contexts of the type "X consumes Y measures/portions in Z days". However, so far it is the only root for 'eating' at our disposal, and there are no valid arguments to suggest the presence of a different 'colloquial' root in Elamite.

+ Nostratic: in Dravidian, a similar root for 'eat' can be found in Proto-North-Dravidian **mōq-* 'to eat' (Kurukh *mōxnā,* Malto *mōqe*), with a further parallel in Malayalam *mōkuka* 'to drink, sip' (DED 5127). The root can further be compared with Proto-Altaic **muk̀ʿè* 'to suck', which is given this meaning based on Proto-Mongolian **meke* 'to suck, chew' and Proto-Tungus **muku-* 'to fill mouth with liquid'; cf., however, Proto-Korean **mək-* 'to eat, drink' and Proto-Japanese **mà̀kà̀-nàp-* 'to feed' (causative formation?). This can hint at a tentative meaning "to eat (of liquid food)" in Proto-Nostratic, with further generalizations in several language groups. The match is not thoroughly exact (unclear vocalism correspondences), but acceptable.

? Afroasiatic: Cf. PAA **muk-* 'suck, drink' (HSED 1790). If the root is indeed of PAA character, it most certainly belongs here, but the weak distribution (Arabic + West Chadic) and the lack of exact semantic parallels (the meanings 'suck', 'sip', and 'chew' are attested) do not make this an exact match in any case.

13. "eye": mE *el-ti 'eye',* nE *el-ti-pi* 'eyes', achE *el-te* 'his eye'.

+ Afroasiatic: PAA **ʕil-* 'eye' (HSED 1101) is one of the main roots for 'eye' in Cushitic (well-established Agaw and Eastern Cushitic parallels) and in Central Chadic languages. V. Blažek also adds Egyptian *;r.t* 'eye' to the compared forms, but, according to (HSED 112), this rather belongs to PAA **ʔir-* 'eye' (with further Chadic parallels), so the comparison is dubious; however, further parallels can be also found in Berber (Ghadames *a-wəll* id.). Cushitic, Chadic, Berber and possibly Egyptian evidence all point out that the root is a strong candidate for the main PAA root for 'eye'.

+ Sino-Caucasian: cf. Proto-North-Caucasian **ʔwilʔi* 'eye', which may be further compared with Proto-Sino-Tibetan **ʎa(H)* 'to look' and Proto-Yeniseian **de-s* 'eye'. This is obviously the main root for 'eye' in this macro-family.

? Nostratic: cf. Proto-Nostratic **jela* (ND I 148) 'light, bright' > Proto-Kartvelian **el-* 'to

shine, lightning', Proto-Uralic **jela* 'light, bright', Proto-Dravidian **el-* 'to shine'. The newly established Altaic root **ìla* > Proto-Turc **iler-* 'to be dimly visible', Proto-Mongolian **ile* 'known, evident', Proto-Japanese **àràp-ar-* 'to appear', if it belongs here indeed, could probably correct the original semantics from 'light' to 'visible, appear', in which case the comparison with Elamite *el-ti* is fully justified. However, the Nostratic root does not present an exact wordlist match in any case.

14. "fire": mE *li-im, li-mi-in,* hence also the verb *limma-* 'to burn' (see above).

+ Nostratic: the most obvious comparison is with one of the main Kartvelian roots for fire, well-represented in Swan dialects: Upper Bali *lemesg*, Lashkh *lemes*, Lentekh *lemesḳ* < Proto-Kartvelian **lemeč-* 'fire'. A reliable Uralic parallel can be found in Proto-Uralic **lom3* 'warmth, flame'. While the distribution of the root is not very wide, the correlation between Uralic and Kartvelian is strong enough to propose a Nostratic character for it.

? Sino-Caucasian: cf. Proto-Sino-Tibetan **luam* 'burn, blaze, heat' > Old Chinese **l̲ām, *lham* 'to heat, blaze', Tib. *slam* 'to roast slightly, to parch', etc.

15. "foot": mE, nE *ba-at* (also spelled *pa-at* in mE).

+ Nostratic: obvious parallel in Proto-Nostratic **patʌ* 'foot' > Proto-Indo-European **ped-*, Proto-Dravidian **paṭ-* (NE 368). Taking into account the new Altaic reconstruction **p'ágdi* 'foot, sole', the Nostratic root may have to be reinterpreted as **paGd-* (where **-G-* represents an unknown velar), but that doesn't really afflict the excellent quality of the comparison.

? Afroasiatic: V. Blažek offers several correlates for the word, including Semitic (Akk. *padānu* 'way, path', Arab. *wafada* 'to come, travel'), Egyptian (*p;d, pd* 'knee, to run'), Berber (Mzab *fud*, Ghat *afud*, Zenaga *offuḏ* 'knee'), and East Chadic (Mubi *fúudi* 'thigh'). There may actually be several roots involved here, but none of them seem to share the meaning 'foot', so no exact match can be established.

16. "full": achE *pu-*, found in verbal forms like *pu-qa* 'was full', also in the nominal derivative *pu-pu-man-ra* 'he who fills'. The root may stem from an earlier **pun-*, cf. nE *pu-un-qa-ak, pu-un-qa-qa* 'it was full, filled'.

No reliable external correlations have been found for the root. One could consider a comparison with Proto-Indo-European **pləne-* 'full', if the Elamite form goes back to an earlier **pul-n-*, but this is a very vague probability.

Cf. also PST **phoH* 'to fill in'. The root, however, has no Caucasian or Yeniseian parallels and does not qualify as an exact match.

17. "give": mE *tu-ni-h* 'I gave', mE, nE *du-ni-h* id., achE *du-na-áš* 'he gave', etc.; the common Elamite root is **tun-*.

A second root for 'give' is also fixed in documents, with unclear differentiation in semantics: cf. oE, mE, nE *li-h* 'I gave', der. oE *li-e* 'his gift', mE, nE *li-en-ra* 'he who gives', etc. The verb

could seem to be more archaic than *tun-*, since the former is missing in Old Elamite; however, both verbs are present in New Elamite and the difference in functions between the two is unclear. We will, therefore, subject both roots to comparative analysis.

+ Afroasiatic: V. Blažek compares the Elamite Root with PAA **d[i]n-* 'to give', well represented in Semitic (Akk. *nadānum* 'to give', etc.; the initial **n-* has possibly to be taken as a prefix), and in Egyptian *wdn* 'to make sacrifice'. Although the root is hardly met in the meaning 'give' anywhere outside Semitic, within that particular branch it is one of the main roots denoting that activity. Not an exceptionally strong match, considering also some phonetic problems (a strange variant with voiceless *-t-* in Hebrew and Aramaic *ntn*, for instance), but generally acceptable.

For Elamite *li-*, Blažek quotes the following forms. Semitic: Arab (Ta'iizz) *mā ʔallōs* 'there is not', Amhara *ʔall-* 'to be'. Cushitic: Qwara *lee* 'to give', Proto-East-Cushitic **leh-* 'having', etc. Chadic: Logone *lii* 'to be', Mokilko *ʔél-* 'to give'. I have a hard time trying to imagine these forms as going back to an even hypothetic PAA **le-/*ʔele-* 'to give'; forms with the meaning 'give' are isolated and cannot pretend to be archaic.

+ Sino-Caucasian: on the contrary, Elamite **li-* seems to have an excellent match in the common PSC root for 'give', represented by PNC **iɬ̲V* and PST **laˇʔ*.

? Nostratic: certain parallels can be traced with the common Nostratic root for 'give', namely PN **to/H/ʌ* (NE 338) > PIE **dō-* (**deH^{w}-*), PA **tā-* (new reconstruction **t'uja*), PU **tōγe-*, PD **tā-/*ta-*). This would, however, presuppose, that the Elamite base *tuna-/tuni-* is derived from an older **tu-* with a nasal suffix. As indirect evidence in favor of this hypothesis we can quote such occasional achE forms as *id-du-iš* 'they gave out, issued', *id-du* 'give out!, issue!'. However, these considerations are somewhat speculative.

18. "good": oE, mE, nE *ba-ha.*

? Afroasiatic: a perfect match for the root could have been PAA **baḫuy-* 'be good' (HSED 191). Unfortunately, the root is extremely weak, being reconstructed on the basis of Arabic *bḫy* 'be beautiful' and Zime (Central Chadic) *ḅayʔ* 'good'. Besides being so drastically underrepresented, the root presents further problems with semantics and phonetics (metathesis? in which subgroup?). It cannot therefore qualify as an exact match.

? Sino-Caucasian: a tentative, but by no means, exact cognate might be found in PNC **bVHV* 'big, many', PST **phāH* 'vast, wide', PY **bəj-* 'many'.

19. "green": nE *hu-la-ap-na.*

The meaning reconstructed tentatively; according to HK, the word denotes a certain color and is used exclusively for describing clothes. The meaning 'green' is suggested due to an alternate form *hu-ra-ap-na* which is then compared to the root *hura-* 'to bloom, become green (of trees)'; in this case, *hu-ra-ap-na* may be an erroneously contaminated form.

No reliable external parallels can be found. It would be interesting, however, to compare the form to PAA **ḫ̲Vč̣eb-* 'be green' (HSED 1385), particularly to Proto-Semitic **ḫ̲Vṣ̂ib-* > Akk.

ḫaṣābu 'to be green', Arab *ḫḍb* 'to paint'. Considering that Proto-Semitic **-ŝ-* is usually reconstructed as a lateral affricate, it is not excluded that the Elamite form is, in fact, an old borrowing from a dialect of Proto- Semitic.

20. "hair": nE *še-e* 'his hair' (?).

A very uncertain form attested in one extract, where it is furthermore dealt with *animal* (goat) hair. No reliable parallels have been found for this root.

21. "hand": mE *ki-ir-pi* 'hands', achE *kur-pi* id. (The original vowel of the root is unclear due to a regular confusion of *-u-* and *-i-* from Middle to Achaemenid Elamite).

No exact matches in any of the macro-families. V. Blažek suggests an Afroasiatic parallel in PAA **ḳar-* 'arm, shoulder' > Somali *qarqar* 'upper part of shoulder' (East Cushitic), Egyptian *qʕḥ* 'arm, shoulder'. Not only does the root not represent an exact match, it is also extremely weak and underrepresented on its own.

? Sino-Caucasian: potential correlates for the Elamite root can be seen in Proto-Yeniseian **gVʔVr* 'hand', PST **Khʷăr* 'fist, handful'; however, if these two are related to PNC **kwīlʔi* 'hand' (NCED 706-7), the original consonant of the root should be reconstructed as *-l- and can hardly qualify as a reliable phonologic match for Elamite. Cf. also PY **xire* 'arm'.

22. "head": mE, nE *uk-ku*. Judging by Elamite material, the word is usually seen as related to the postposition *uk-ku* with the meanings 'upon; because, due to, according to' (HK 1210). The meaning 'head' is probably primary here, with a later semantic derivation ("head" => "top, above"=> later development as in Greek *kata* 'downwards; according to').

+ Nostratic: An exact match exists here in Uralic **uk3* 'head' (Redei 542). McAlpin compares the root in its abstract meaning with PDr **uk-a-* 'to ascend, jump up' (DEDR 559); we could also add PA **ǰāga* 'to rise, fall over' > Proto-Japanese **a(n)ka-* 'to raise; to give', Turkic **iāg-* 'to rise; to fall over', etc. One might suggest two different and often contaminated roots within Nostratic itself ("to rise, ascend", "head, summit"), or, more probably, suppose a certain polysemy within Nostratic dialects themselves.

V. Blažek rejects McAlpin's comparison assuming the Elamite form to be borrowed from Sumerian *ugu* 'head, skull, upper side, on'. This cannot be excluded, but the basic character of the lexeme (it forms part of Yakhontov's "ultra-stable" 35-word list) makes such a probability somewhat doubtful, considering the vast usage and semantic differentiation of the root in Elamite.

23. "hear": oE, mE, nE **hap-*, **hahp-*. Certain problems with establishing an exact meaning here, as the majority of the attested forms are usually assigned the meaning 'to listen' (*ḫa-ap-hu* 'we listen', *ha-h-pu-un-ra* 'listener', etc.). However, certain phrases like nE *ku-ul-lak.ú-me ha-pu-it-ni* 'may you hear my prayers' suggest that the word could be used in both the functions of 'listen' and 'hear'.

In any case, the word has no apparent cognates in any macro-families. V. Blažek's Afroasiatic comparisons (East Cushitic **hub-* 'to know, be sure', Dahalo *huw-aṯ-* 'to know') are scattered and unreliable.

24. "heart": mE *bu-ni*.

The syllabic notation *bu* is extremely rare in Elamite; in fact, apart from proper names, it is only met in this particular lexeme. It cannot be excluded that the word was actually dissimilated from an earlier **muni*, with a specific graphic change to mark the process (while normally any old sequences of the **bu-* type were marked in Elamite as *pu-*, whether it was just a graphical formality or reflected a real phonetic development).

If Elamite *buni* indeed goes back to *muni*, the word finds excellent parallels in most macro-families:

+ Nostratic: PA **mi̯ónu̯* 'heart, breast' > Proto-Tungus **mianam* 'heart', Proto-Korean **mănăm* 'heart', Proto-Japanese **muna-i* 'breast'.

+ Afroasiatic: PAA **mun-* 'heart, liver' (HSED 1794); the entry serves as the main word for 'heart' in Dahalo (*muna*) and Proto-South-Cushitic (Proto-Rift) **mun-*.

? Sino-Caucasian: cf. PNC **mōnqī* 'breast, bosom'. The root does not present an exact wordlist match, but most certainly belongs here.

Overall, this common Eurasian root (**mun-, *munqi-*) was not well preserved in daughter languages, which is due to it already possessing 'abstract' connotations on the Proto-Eurasian level. However, the exact parallels between Altaic, Cushitic, and North Caucasian make it a strong candidate for the common Eurasian word for 'heart'.

V. Blažek suggests an alternate comparison with PAA **b[u]n-* > Akk. *abunnatu(m)* 'navel, umbilical cord', Eg. (Med) *bn.tj* 'female breasts', Gulfei *fana*, Makari *fina* 'breast' (Central Chadic). While these parallels do not presuppose any phonetic changes in Elamite, the suggested forms are scattered and do not present any exact matches.

25. "horn": mE, nE *qa-as-su*, nE *kaš-su*.

+ Afroasiatic: V. Blažek compares the root with PAA **ḳVsw/y-* 'horn' > Beja *koos*, Proto-Omotic **ḳusim*; Senhaja *a-qaššaw*, Matmata *qiš*, Harawa *kiišu* (Berber), Logone *kāšu*, with the meaning 'horn' preserved everywhere. The root can certainly pretend to be of Common Afroasiatic origin, and is thus a perfect match for the Elamite entry.

26. "I": oE *u̯*, mE *u, u̯*, nE *u*, achE *hu, u*.

Any observations on the connection between this Elamite pronoun and corresponding pronouns in other macro-families would be highly speculative. Thus, McAlpin reconstructs a Proto-Elamo-Dravidian **i* > Proto-Dravidian **y-* in **y-ān* 'I'; in Elamite he supposes that the usual vowel shift **i* > *u* has taken place. However, this shift has a sporadic character, and in most cases, both variants are attested (cf., for instance, oE *ni*, but mE *ni, nu*, nE, achE *nu* 'thou'). The 1st person pronoun, on the contrary, shows a stable and regular **u* at all stages, and there is little

ground to doubt its primary character, which nullifies the Dravidian comparison.

Blažek compares the Elamite pronoun with various 'labialized' forms of the Afroasiatic 1st person pronoun, scattered in various languages and dialects; some of these forms, like Eg. *;w*, later *wy* 'I' (dependent series), or the Chadic forms for 1sg possessive pronoun (Hausa *-wa*, etc.), look promising, but nevertheless, none of them constitutes an exact match.

To this, we could certainly add the PIE form **wei-*, **wei-es* 'we', the main root for 1st person plural pronoun. All of these comparisons point at a very archaic state of the Elamite pronoun, however, none allows for establishing any direct matches within the 100-word list.

27. *"kill"*: achE *hal-ba-*, cf. forms like *hal-ba-qa* 'is killed', *hal-ba* 'dead, killed', *hal-pi-iš* 'he struck down' (the meanings 'to strike' and 'to kill' go hand in hand for the root). Cf. also the forms for 'die'.

+ Nostratic: assuming that Elamite *-b-* is of suffixal nature, one could compare PA **ə̀lV* 'to destroy, kill' > Proto-Turkic **Alk-* 'to finish, destroy, be exhausted', Proto-Mongolian **ala-* 'to kill', Proto-Tungus **āli-* 'to crumble; to kill an animal'. Cf. also in Dravidian, Proto-Kolami-Gadba **aḷ-ŋ-* 'to kill' > Kolami *alŋg-*, Naikri *aḷaŋ-* id. (DED 309), maybe also Parji *anḍkip-* 'to destroy, kill', Salur *anukci key-* id. (DED 277; a few cases of irregular nasalization of lateral resonants are found in this subgroup, cf. PDR **kal* 'stone' > Ollari *kanḍ*, Salur *kanḍu*, etc.).

? Afroasiatic: Blažek compares the root with PAA **ḏ-b-l* > Semitic **ḏbl* 'to ruin, destroy', Eg. (Pyr) *ḏb;* id. Very weak comparison (not an exact word match, besides supposing a metathesis in Elamite). Cf. also PAA **ġal-* 'to kill' (HSED 1004), with, however, an extremely weak representation (meaning 'kill' in only two Central Chadic languages).

28. "know": mE, achE *tur-*, *turna-* (mE *du-ur-na-áš* 'he knew'; achE *tur-na-iš* id., etc.).

? Nostratic: cf. PA **t'erk'o* 'to think' (> Proto-Turkic **TerKe-* 'to observe, research'; Proto-Mongolian **taraki* 'brain, mind; head'; Proto-Tungus **terge-* 'to think, to doubt') and particularly PD **ter-i-* 'to be seen, clear', with constant meaning shifts to 'know' (DED 3419; cf. Tamil *teruḷ* 'to know', Malayalam *teriyuka* 'to understand, know', etc.). However, nowhere in Dravidian does the meaning 'know' seem to be original.

29. "liver": nE *ru-el-pa-mín*. An unclear word with, furthermore, no wholly established meaning. No apparent cognates.

30. "man": achE *ru-h*, cf. also mE, achE *ru-hu* 'offspring' and other derivates.

? Afroasiatic: cf. PAA **reḫ-* 'man' (HSED 2106) > Eg. (Pyr) *rḫy.t* 'men', Proto-West-Chadic **ryaH-* 'male' (Bokkos *re*). The match is perfect phonetically, but the root is so drastically underrepresented that an exact match is out of the question. Blažek compares the root to Akkadian *raḏū*, *reḏū* 'to beget, pair', as well, but this is questionable from both phonetic and semantic points of view.

31. "many": achE *ir-še-ik-ki* (**ršekki?*). A derivate of **rša-* 'big', see above.

32. "meat": nE *i-iš-ti*.

+ Afroasiatic: cf. PAA **ʔač-/*ʔič-* 'meat' (HSED 13) > Gisiga *ʔiše* (Central Chadic), Proto-Agaw **ʔVč-*, Proto-Omotic **ʔač-* 'meat, body'. Not quite reliable for phonetic reasons, but the root's wide distribution in Omotic makes this a somewhat exact match.

33. "name": mE, nE, achE *hi-iš*.

Comparisons have been offered for the word by both McAlpin and Blažek, but both remain dubious. McAlpin compares it with PD **ey-* 'to know how to, understand' (DED 806), reconstructing a Proto-Elamo-Dravidian **heš-* 'to know how to' (?).

Blažek draws on the Elamite derivative *hiša* 'praise, glory', and compares both words with PAA **ḥaS-*, **ḏaS-* > Akk. **ḏasāsu* 'to remember', Ugarite *ḏss* 'to feel', Arabic *ḥassa* id.,; Proto-East-Cushitic **haašaw-* 'to chat'. This comparison looks somewhat more plausible than McAlpin's, but is still nowhere near an exact match.

34. "neck": nE *ti-pi* (meaning approximate).

? Afroasiatic: Blažek proposes a correlation with PAA **duby-* 'back, tail'; according to HSED 731, where the root is reconstructed as **dub-*, the primary meaning of the root is 'tail' and 'buttocks' rather than 'back'; either way, this is not an exact match. No other cognates have been found.

35. "night": oE, mE *šu-ut-me*, cf. oE *su-dè-it* 'at night'.

+ Afroasiatic: according to Blažek, this root corresponds with one of the main Omotic roots for 'night', cf. Dime *suut-u*, Galila *šoyt-i*, Ari *soyt-i*, Hamer *soyt-i*, *soot-i* 'night'; he further suggests comparisons with Arabic *swd* 'to be black' and Beja *sootay*, *suutay*, *sooday* 'of dark colour'. The Omotic entry, however, constitutes an exact wordlist match.

36. "nose": achE *ši-um-me* 'his nose' < **šim-e*?

V. Blažek analyzes the form as **šin-me*, with a suffixed *-me* as in *tit*, *tit-me* tongue and subsequent assimilation. From a "pure Elamite" point of view, though, such a hypothesis is highly questionable, considering that there exist other examples of roots ending in *-n-* with the same suffix and no assimilation: cf., for instance, mE *murun-me* 'arable land', achE *nan-me* 'day'. Much more probable is the 'traditional' interpretation of the form as **šim-e*, where *-e* is the possessive suffix of the 3sg pronoun.

On the other hand, reconstructing the initial form as **šin-* would help bring in many reliable external cognates, such as PAA **san-/*sin-* 'nose' (HSED 2194); PD **čunḍ-* 'beak, snout' (DEDR 2664); PU **s'aŋk3* 'smell; to smell' (Redei 462); PNC **s̲Hwin-ṭ* 'to smell', PST **siāŋ* or **suŋ* 'to smell'. All these forms certainly point to a common Eurasian root; however, our not being able to satisfactorily rationalize the change **šin-* > *šim-* prevents us from accepting the

comparisons.

Elsewhere, cf. PA **suma* 'nose, part of nose' > Proto-Turkic **sum-/*sɨm-* 'nose' (Chuvash *sъmza*), Proto-Mongolian **samsaɣa* 'wing of nose', Proto-Tungus **soŋgi-* 'nose, nose ring'. Unfortunately, the root is only represented in the meaning 'nose' in Chuvash and one Tungus dialect and has no reliable Nostratic parallels.

37. "no": nE, achE *in-na*; oE *a-ni*, mE *a-ni*, *a-ni-i*, nE *a-ni*, *a-nu*, achE *an-nu*, *a-nu* (the second root used in prohibitive constructions).

+ Nostratic: PA **ā̀ni* 'not', probably related to the well-known Nostratic negative/prohibitive particle (PIE **ne*, PU **ne*, PK **nu*, cf. ND p. 17).

+ Afroasiatic: PAA **ʔin-* (Blažek): Akk. *yānu* 'isn't', Hebrew *ʔayin, ʔēn* id., etc. (the basic Semitic verb for negation), etc.; Eg. *n* 'not'; parallels also exist in Cushitic.

38. "one": achE *ki*.

+ Afroasiatic: while one can hardly speak of a common PAA root for 'one', the comparisons of Blažek look quite plausible. Cf. particularly the Omotic forms (Dizi *qò̀y*, Sheko *k(w)oy* 'one') and East Cushitic **kaww-* 'one; alone'; other parallels include Eg. (Pyr) *kyy* 'another', Beja *kwo* 'unit' and a few tentative Chadic parallels.

No other parallels have been found for this numeral in Nostratic or Sino-Caucasian; connections with forms such as PU **ükte* 'one' would be extremely tentative.

39. "rain": nE *te-ip*.

? Afroasiatic: cf. PAA **ṭif-* 'drop, rain' (HSED 2470) > Sem. **ṭipp-* 'drop', West Chadic **ṭaf-* 'rainy season', Central Chadic **ṭa-ṭVf-* 'drizzle'. Despite the root's rather weak representation in language branches, the parallel looks convincing, although not constituting a wordlist match.

Blažek compares the root to PAA **dib-/*dub-* > Rendille *dubbat*, Hadiya *duuba* 'cloud' (East Cushitic), Dizi *diab* 'to rain', Kafa *dup* id., Dime *deeb* 'rain', Ari *doob* id. (Omotic), Jimbin *dabuna* 'rainy season' (West Chadic), Kera *dubueni* 'rain' (East Chadic). The comparison is also acceptable, but the distribution of the meaning 'rain' is too scarce in languages to present a convincing match.

40. "say": achE *na-* (*na-aš́* 'he said', *na-an-be* 'they are saying', etc.)

+ Nostratic: the only more or less solid Nostratic parallel for this verb is found in Dravidian. McAlpin compares Elamite *na-* with PDr **eṉ-* 'to say, speak', noting a very close similarity in syntactic use between the two roots. One should, however, note certain serious phonological problems: the reduction in Elamite (McAlpin presumes a Proto-Elamo-Dravidian **ena-* > Elamite *na-*), and also the fact that the etymon presented in DED 868 should actually be reconstructed as **yan-* due to non-trivial vocal correspondences between Dravidian languages. Even so, the comparison is still acceptable.

+ Afroasiatic: cf. PAA **ʔan-* 'to speak' (HSED 40) > Berber **ʔVn-*, West Chadic **ʔan-*, East

Chadic **ʔan*; cf. also Blažek's comparison to certain West Chadic forms (Fyer *ne*, Bokkos *ni*, Sura *naa*, Bolewa *ni na*, Tangale *naa*, etc., all with the meaning 'say'. Whether we are dealing with one or more roots in PAA is hard to tell, but there definitely is some kind of proto-language match with Elamite.

+ Sino-Caucasian: cf. PST **ŋăʔ* 'to speak', PY **ŋa-* 'to speak, say'.

40. "see": *siya-/*ziya-* (both in the meanings 'look' and 'see'; cf. achE *zí-ya* 'I saw', but mE *si-ya-h* 'I watched', etc.).

No evident matches can be found in any macro-families, unless certain non-trivial phonetic changes have to be supposed. ? Cf. maybe PST **siə(H)* 'to know, think'.

41. "sit": cf. nE *mur-da-am-pi* 'they are sitting down', achE *mur-da-ak* 'he was residing, sitting'; nE *mur-tin* 'seat (n.)'. The same root as in *mu-ru-un* 'earth', see above.

42. "skin": nE *ha-te-en*, achE *ha-tin*.

No matches. If *-in* is historically a suffix, one could compare the root with PAA **ʔad-* 'skin' (HSED 15), *ʔadam- id. (HSED 17); that would, however, suppose a correspondence of PAA **ʔ* = Elamite *h-*, which is questionable; also, the AFro-Asiatic root is very weak, being only represented in a couple of Cushitic languages (*ʔad-) and Arabic (**ʔadam-*).

43. "stone": achE *h.har.lg*.

? Nostratic: cf. PD **a̲r-ai* 'rock' (DED 321).

? Afroasiatic: Blažek compares this with PAA **har-* 'mountain, rock' (Semitic: Hebrew *har*, *hererī* 'mountain', Phoenician *hr* id.; East Cushitic: Yaaku *hãã̃rɔ'* 'big rock'; Berber: Ahaggar *ahor* 'accumulation of rocks'). Not an exact match.

44. "sun": oE *na-hu-te*, mE *d.na-h-hu-un-te*, *d.na-h-hu-te*, nE *d.nah-hu-un-te*. The word is usually interpreted as **nan-hunte* 'keeper of day', and can therefore be considered as a euphemistic substitute for the original Elamite word for 'sun', which is unknown.

45. "that": mE, nE, achE *ak-ka*, *ak-qa*.

If the final *-ka* can be considered as suffixal (cf. the similar pronoun *ap-pa* 'what, that'), the root can easily be compared with Common Eurasian deictic particles:

+ Nostratic: PN **a* 'that' (ND I 121) > PA **a/*o* 'that', PU **a-/*o-* 'that', PD **a* 'that', PK **/h/a* 'this'.

? Afroasiatic: cf. the parallels in ND I 12, where Illich-Svitych compares the Semitic definite article (Aramaic *-ā*, Hebrew *ha* with secondary *h-?*) and a few Cushitic forms. Cf. also Blažek's comparisons: PAA **ʔak/k/-* > Semitic: Akkadian *akkāʔi*, Hebrew *ʔāk*, Aramaic *ʔakam* 'how', *ʔaka* 'why', Ugaritic *ik*, Mehri *ūkō* id.; East Cushitic: Oromo *aka* 'like', *akka* 'that, in order to, like'; Omotic: Yemsa *akka* 'thus, how?'; West Chadic: Ngamo *aka* 'how', etc. Note, however,

that while the forms are certainly comparable, the meaning 'that' (demonstr. pronoun) in any of the Afroasiatic languages is exceedingly rare and cannot pretend to be of proto-language origin. Thus, it does not constitute an exact match.

? Sino-Caucasian: cf. PNC **hă*, a base used for near deixis as opposed to **ʔŏ*, used for far deixis. It is unclear whether it is PNC **ʔŏ* that corresponds to Elamite/Nostratic **a-* or PNC **hă* with a later shift in meaning, so an exact match cannot be guaranteed.

46. "this": mE *hu*, nE *hi*, achE *hi, hu*; oE, mE, nE, achE *i*. The basic form is **i*; forms with *-u-* show the usual Elamite graphic (phonetic?) variation between *-u-* and *-i-*.

+ Nostratic: PN **ʔi/*ʔe* (ND 134) > PK **(h)i* 'that', PU **i-/*e-* 'this', PD **i-* 'this', PA **i* 'this'.

+ Sino-Caucasian: PNC **ʔi* 'this', PST **ʔĭ* id.

It is interesting to note that, while the basic deictic particles **a-* and **i-* are so widespread within Nostratic and Sino-Caucasian, they are nowhere near as strongly distributed among Afroasiatic languages. Reliable parallels certainly can be found, but there is no talk about reconstructing a stable PAA **a-* or **i-* in their basic deictic meanings. (cf., for instance, the scattered parallels that Illich-Svitych gives in ND 134, most of them having to do with the 3sg m. personal marker in verbal conjugation).

47. "thou": oE *ni*, mE *ni, nu*, nE, achE *nu*.

+ Nostratic: McAlpin's classic comparison with PDR **nī* 'thou' is still working (although a more correct PDR reconstruction would be **njīn* for the direct stem). To this one should also add PA **ná* 'thou' > Proto-Turkic **-ŋ* (ending of the 2nd person), Proto-Korean **nə̀* 'thou', Proto-Japanese **ná* id. While the basic Nostratic stem for 2nd person sg. is usually reconstructed as **ti/*si*, the Altaic-Dravidian isogloss is too serious to go unnoticed.

? Afroasiatic: Blažek quotes North Omotic **ni, *ni-ni* 'thou' (cf. Kefa *ne*, Welamo *nena*); these forms, however, have no parallels in other branches and do not even qualify as a solid Proto-Omotic root, much less Proto-Afroasiatic.

+ Sino-Caucasian: cf. PST **nă-* 'thou, you' (the main Sino-Tibetan root for 'thou', although it has no Caucasian or Yeniseian parallels).

48. "tongue": achE *ti-ut, ti-ut-me*.

? Nostratic: cf. Proto-North-Dravidian **taṭ-qā* 'tongue' (> Kurukh *tatxā*, Malto *taṛte*; DED 3064). The root has no other Dravidian or Nostratic parallels, however, and cannot be taken for an exact match.

49. "tooth": mE *si-h-ha*.

Two different self-exclusive comparisons can be offered in the case of this root. On one hand, mE **sihha* can go back to an earlier oE **sihhan*, preserved as a proper noun and interpreted by Heinz-Koch as 'tooth'. This is the etymology accepted by Blažek, which makes it possible for

him to compare the root with:

+ Afroasiatic: **si[ḥ]n-* 'tooth' > Sem. **šinn-*, South Cushitic **siḥn-*, Ahaggar *esiin* (Berber), West Chadic (SBauchi) **sin*, Ngizim *yaanau*, etc. (In HSED 2250, the root is reconstructed as **sin-*).

On the other hand, even if the Old Elamite proper name *si-h-ha-an* does belong here (which is not obvious), the final *-n* can well be a suffix. Assuming a possible assimilation, we can then trace **sihha-* back to **silha-* and compare it with:

+ Sino-Caucasian: PNC **cɨ̌łɦV̄* 'tooth', PST **ĆVj* 'tooth, fang';

+ Nostratic: PU **c'il3-m3* 'fang', PA **sīĺa* 'sharp stick, tooth' > Proto-Turkic **sīĺ-* 'tooth, sharp stick'; Proto-Mongolian **sidü* 'tooth', etc.).

50. "tree": nE, achE *GIŠ.hu-sa.*

+ Afroasiatic: PAA **ʕüĉ̣-* 'tree' (HSED 1126) > Sem. **ʕiṣ̂* 'tree', East Chadic **ʔuĉ̣-* 'fig tree' (?). This is the main Semitic etymon for 'tree', and thus looks quite reliable.

? Nostratic: cf. PIE **ʔōsʌ-* 'a k. of tree' (Lith. *úosis* 'ash tree', Proto-Slav. **asь* id.

51. "two": nE *ma-ir, mar-ra*, achE *mar.*

No reliable parallels for this root can be found. Blažek presumes a development **w-* > *m-* in Elamite (i.e. Proto-Elamite **wari*), comparing it with PAA **wary-* (Beja *wari* 'other', Proto-Cushitic **wäri* 'or', Hausa *waari* 'a pair'). Even assuming that his hypothesis for Elamite is correct, the comparison does not constitute an exact match.

An alternate comparison would be to Proto-Dravidian **maṟ-* 'other, next' (DED 4766); however, according to the hypothesis expressed in (Starostin 1998), the reconstruction for the Proto-Dravidian root should rather look like **maḏ-* (with an alveolar stop) which further complicates the comparison. In any case, this cannot be judged as an exact match.

52. "walk": nE, achE *izza-/izzi-* (*iz-zí-iš* 'he went', achE *iz-zí-man-ra* 'the walker', etc.).

The root has no exact semantic matches in any of the major macro-families, but can be easily compared to quite a few forms anyway:

? Nostratic: cf. PA **ìče* 'to reach, follow, go' > Proto-Turkic **Eč-* 'to follow'; Proto-Mongolian **iču-* 'to go back, get ready to go back'; Proto-Tungus **is-* 'to reach'; Proto-Japanese **ìsuà(n)k-* 'to hurry, get ready to'. Cf. also Proto-South-Dravidian **Is-aŋ-/*Ij-aŋ-* 'to move, go' (Tamil *iyaŋku, icaŋku*, Kannada *esagu* 'to drive'; DED 469).

? Afroasiatic: cf. PAA **si-* 'go, come' (HSED 2225) > Eg. *sysy* 'hurry, hasten'; WCh **siy-* 'return', CCh **si-* 'come'.

? Sino-Caucasian: cf. PNC **iš̱A* 'to move, come' (Proto-Avaro-Andian **š:ʷV-* 'to come, reach'; Proto-Lak **aj-š:u-* 'to retreat, go away'; Proto-Dargwa **aš:-* 'to come', Proto-Lezghian **ʔiš:ā-* 'to be, to come'; Proto-West-Caucasian **šə* 'to move, come').

53. "water": mE *zu-ul.*

No exact parallels for this root can be found, except for words with rather remote semantics, such as PAA **sayal-* 'water flow, current' (HSED 2213), PA **ǯiōl[u]* 'river bed', etc. The relationship remains unclear.

54. "we": oE *ni-ka*, mE *ni-qa*, nE, achE *nu-ku*.

+ Nostratic: PN **nʌ-* (ND I, p. 7) 'we (excl.)'. This base in Nostratic is represented by PD **nām* 'we (excl.)', PIE **ne-/*nō-* 'we (oblique stem)', PK **naj* 'we'. (Note that this is yet another case of potentially close Elamo-Dravidian relationship undermined by data of other Nostratic languages).

+ Afroasiatic: PAA **nV-* 'we' (cf. the forms given in Blažek's table of Afroasiatic pronouns).

+ Sino-Caucasian: PST **ŋā-* 'I, we' (Old Chinese **ŋhā* 'I, we'; Tib. *ŋa* 'we', Burm. *ŋa* 'I', etc.).

Conclusion

As can be seen from the wordlists above, despite the scarcity of known lexemes with well established meanings, Elamite still presents sufficient surface evidence to help relate it to some of the surrounding macro-families. A particularly striking discovery is that Elamite seems to share a significantly lesser number of cognates among the 100-wordlist with Sino-Caucasian (7-8 pluses) than with Nostratic (14-15 pluses) or Afroasiatic (15-16 pluses). This would mean that, in case all of those three macro-families were interrelated, Sino-Caucasian would have to be considered more distant from the other two.

As for the Nostratic and Afroasiatic parallels, given the highly approximate reliability of the overall procedure in this particular case, it is nigh impossible to determine which of the two families is more closely related to Elamite. Afroasiatic seems to give somewhat better parallels within the "ultra-stable" 35-word list, and such exclusive Afroasiatic/Elamite matches as "blood", "earth", and "horn", look extremely promising. On the other hand, in most of the cases Elamite forms match a certain proto-form of one, or at the most two Afroasiatic sub-branches, which does not allow us to claim an exact match with Proto-Afroasiatic as such.

That said, there are certain things we can say for almost certain, based on the above comparisons. First, that there is absolutely no sufficient evidence whatsoever to claim a specific Elamo-Dravidian relationship (apart from the usual - and quite common - matches in personal and demonstrative pronouns, there are only 2 direct matches between Elamite and Dravidian in the entire wordlist). Second, that despite this, Elamite presents us with a far clearer case of relationship than Sumerian, lexicostatistical results for which look far more grim in general; both the lexical and the morphological evidence of Elamite find enough parallels in Eurasian macro-families to exclude the possibility of chance similarities.

At this point, I would probably describe Elamite as a "bridge" between Nostratic and Afroasiatic, perhaps a sole remnant of an old sub-branch of the global "Eurasian" or "Boreal" family that also includes Nostratic and Afro-Asiatic. This would explain many of the lexical and morphological parallels proposed by both McAlpin and Blažek, as well as by myself in the present article. As a working hypothesis, this solution seems rational to me, and unless further evidence from Elamite (or Afroasiatic) comes up to sever the ties between these two families, I think this is the most plausible way to deal with the current situation.

Abbreviations

DED = Dravidian Etymological Dictionary. Burrow & Emeneau, 1984.
HK = Hinz & Koch, 1987.
HSED = Hamito-Semitic Etymological Dictionary. Orel & Stolbova, 1994.
NCED = North Caucasian Etymological Dictionary. Nikolayev & Starostin, 1994.
ND = Nostratic Dictionary. Illich-Svitych, 1971-1984.
NE = Nostratic Etymologies. Illich-Svitych, 1967.
PED = Proto-Elamo-Dravidian. McAlpin, 1981.
STED = Sino-Tibetan Etymological Dictionary. Peiros & Starostin, 1996.
YD = Yeniseian Dictionary. Starostin, 1995.

References

Blažek, Václav. 1999. "Elam: a bridge between Ancient Near East and Dravidian India?" In: *Archaeology and Language IV: Language change and cultural transformation*, eds. Roger Blench & Mathew Spriggs. London/NY: Routledge. [Reprinted in this issue.]

Burrow, T., and M.B. Emeneau. 1984. *A Dravidian Etymological Dictionary*. Second Edition. Oxford.

Caldwell, Robert. 1856. *A Comparative Grammar of the Dravidian or South-Indian Family of Languages.* London.

Diakonoff, I. M. 1979. "Elamsky jazyk" (The Elamite Language). *Jazyky Azii i Afriki* (The languages of Africa and Asia), v. 3, pp. 37-50. Moscow.

Hinz, W., and H. Koch. 1987. *Elamisches W£rterbuch* (in 2 Teilen), Berlin.

Illich-Svitych, V. M. 1967. "Materialy k sravnitel'nomu slovar'u nostraticheskikh yazykov (Materials for a comparative dictionary of the Nostratic Languages)." In: *Etimologiya 1965*, Moscow.

---------- 1971-1984. *Opyt sravneniya nostraticheskikh yazykov* (A tentative comparative dictionary of the Nostratic languages). vol. I, 1971, vol. II, 1982, vol. III, 1984. Moscow.

Klimov, G. 1964. *Etimologicheskii slovar' kartvel'skikh iazykov* (An etymological dictionary of Kartvelian languages). Moscow.

McAlpin, David W. 1974. "Toward Proto-Elamo-Dravidian." *Language* 50: 89-101.

---------- 1975. "Elamite and Dravidian: Further Evidence of Relationship." *Current Anthropology* 16: 105-115.

---------- 1981. *Proto-Elamo-Dravidian: The Evidence and its Implications*
. Philadelphia: The American Philosophical Society.

Nikolayev S.L., and S.A. Starostin. *A North Caucasian Etymological Dictionary*. Moscow: Asterisk Press.

Orel V., and O. Stolbova. 1994. *Hamito-Semitic Etymological Dictionary*. Brill Academic Publishers.

Peiros, I., and S.A. Starostin. 1996. *A Comparative Vocabulary of Five Sino-Tibetan Languages.* University of Melbourne, Australia.

Redei, K. 1986. *Uralisches etymologisches Wörterbuch.* Wiesbaden: Harrassowitz.

Starostin, G.S. 1998. "Alveolar Consonants in Proto-Dravidian: One or More?" *Proceedings of*

the International Conference on South Asian Languages (July 1 - 4, 1997). Moscow.
Starostin S.A. 1995. "Sravnitel'nyj slovar' yeniseyskikh yazykov (A comparative vocabulary of the Yeniseian languages)." In: *Ketskyj sbornik*, vol. IV, pp. 176-315. Moscow.
Stolbova, O. 1996. *Studies in Chadic Comparative Phonology*. Moscow.

Some New Dravidian-Afroasiatic Lexical Parallels

By Václav Blažek
Institute of Linguistics, Faculty of Arts
Masaryk University
Brno, Czech Republic

The most promising genetic affiliation of the Dravidian language family seems to be its inclusion in the Nostratic macro-family. Dravidian languages have been compared separately with various branches of the Nostratic macro-family: Uralic (Schrader, Burrow, Andronov, Tyler, Marlow), Altaic (Bouda, Menges, Vacek), Kartvelian (Fähnrich), and Indo-European (Gnana Prakasar, Southworth). They have also been compared with several Nostratic branches in individual studies, such as with a combination of Semitic, Indo-European, Uralic, and Altaic (Caldwell) or Uralic and Altaic in conjunction with Japanese (Fujiwara). As concerns works specifically devoted to comparison between Dravidian and Afroasiatic languages, the only known works are only partial comparisons, the contributions of which are debatable. A few examples are the works by Homburger (Dravidian vs. Egyptian, Dravidian vs. Cushitic) and by Samsuddin (Dravidian vs. Semitic).

The Dravidian language data given in the published parts of the Nostratic dictionary (Illič-Svityč 1971, 1976, 1984: 378 roots altogether) correspond well with the data of other branches, as categorized by the following numbers (numbers in parentheses designate additional possible, but questionable, cognates):

Dravidian vs. Afroasiatic	**99**	**(125)**
Dravidian vs. Kartvelian	**58**	**(75)**
Dravidian vs. Indo-European	**104**	**(125)**
Dravidian vs. Uralic	**105**	**(115)**
Dravidian vs. Altaic	**107**	**(125)**

Dravidian material is represented in 144 roots in the 1971 volume, with the addition of 21 new roots in the 1976 volume, and the addition of another 9 new roots in the 1984 volume. Another addition of approximately 20 other roots has not been included in the dictionary; these, however, may be used as supplementary examples (see author's notes in Lexica Nostratica: Addenda et Corrigenda I, II).The primary goal of this contribution to the Nostratic lexicon between Dravidian and Afroasiatic as opposed to comparisons with a wider variety of Nostratic languages, not to mention comparisons with Sumerian alone.

This text presents more than 120 new lexical parallels between Dravidian and Afroasiatic, meaning that the corpus collected by Illič-Svityč (which also includes verbs and grammemes) is doubled. Four of these supplement *Opyt sravnenija nostratičeskix jazykov* (1971, 1976, 1984); four others represent additions to *Materialy k sravnitel'nomu slovarju nostratičeskix jazykov* (*Étimologija* 1965, Moskva 1967). Parallels from the Nostratic languages other than Dravidian and Afroasiatic are cited in 70 cases (Elamite 9, Indo-European 42, Kartvelian 9-10, Uralic 21-22, Altaic 21-23); the Sumerian data, not included in the statistics of the Nostratic comparanda, are cited in 13 cases. The comparison with Sumerian does not mean the affiliation of Sumerian in the Nostratic macrofamily. Together with Alexander Militarev we try to explain the numerous Sumerian-Afroasiatic parallels as a result of a merger of two language components in Southern Mesopotamia: a substratum, probably representing an independent Afroasiatic dialect, and an adstratum, with probable Sino-Caucasian genetical links (cf. Blažek 1999, 54-55).

The lexical material is divided according to semantic fields as follows: **A. Body parts; B. Human society; C. Fauna; D. Flora; E. Inanimate nature / space / time; F. Culture.** Many new cognates have been discovered which are distributed among several grammatical categories, including adjectives, terms from which the numerals have evolved, verbs, pronouns, and various grammatical particles. But for this article I am restricting the extent of my contribution to nouns only, with a few exceptions. In addition to the most basic lexical elements, such as body parts and natural objects, I have also included common cultural terms, which may reflect similar ecological conditions among the different communities (e.g. for flora or fauna) as well as the cultural levels of these communities as determined by the neolithic revolution (e.g. house, village / city, hoe / plough, to sow, to milk, honey, bow, arrow, etc.).

Data such as these seem to imply some sort of secondary contact between speakers of the Dravidian and Afroasiatic languages, perhaps through the habitation of the Mesopotamian area before the coming of the Sumerians. Nevertheless, we cannot exclude an alternative explanation: the possibility that Dravidian was a merger of two proto-languages which occurred prior to their emigration to the Indian peninsula, these languages being Northern Nostratic and Southern Nostratic (Afroasiatic). Of course, definitive conclusions regarding the preceding questions will require interdisciplinary research within the fields of archaeology, anthropology, and historical linguistics. Even now, however, despite the significant recent developments in Afroasiatic reconstruction, we can still rely upon the excellently validated system of correspondences between Dravidian and Afroasiatic formulated by Illič-Svityč.

The first version of this study originated in the late 1980's. A very telegraphic report was published in the 'red series' edited by V. Shevoroshkin in Bochum (1992). The present version is based not only on frequently tentative reconstructions, but especially in the case of Afroasiatic, on concrete lexical data mostly with concrete sources.

Lexical data:

A. Body parts

1. Dr ***cik-** "flesh" (D 2549: III, V, VI)
AA ***śVk-** "flesh" > ? Cu: (C) ***səx-** "flesh" > Bilin **səxá**, Kemant **səyä**, Khamtanga **sə́ya** (Appleyard) || (E) Dullay: Gollango **saakan-ko**, Gawwada **sakán-ko** "flesh" (AMS) ||| ? Om: (N) Dizi **acku**, Shako **aško**, Nao **ašku**; Bambeši **öške**, Male **aški** "meat" (Bender) ||| Ch: (C) Mbara-Vulum ***śúk*** (Tourneux), Musgu **k-soog** (Roeder) || (E) Kera **ku-súki** id. (Ebert).

2. Dr ***(c)ū(v)-** "flesh" (D 728: I, VIII; 3373: I, VI, VIII)
AA ***ĉawy-/*ĉawʔ-** "meat" > Sem: Arab **šawā** (š-w-y) "rösten, braten (Fleisch)", **šiwāʔ** & **šuwāʔ** "gebratenes Fleisch" (Wehr 450) ||| ? Eg (Med) **šw.t** "menschliche Körperteil: Seite, Hüfte, Lende" (Wb. IV, 425) ||| Cu: (N) Beja **ša(')** "Fleisch" (Reinisch) || ? (C) Awngi **əšši** "meat" (Hetzron) ||| Om: (N) Wolayta **ašuwa**, Doko **ayšše**, Chara **aččaa** etc. "meat" (Lamberti & Sottile 1997, 298) ||| Ch: (W) Miya **tlíwíyá**, Pa'a **hluwi**, Tule **tlawò**, Ngizim **tlùwái** || (C) Hona **łua**, Lamang **łui**, Dgwede **tlúwe**, Mofu **áłɔ̀w**, Logone **łwa**, Zime-Batna **tlew** || (E) Barain **suu**, Mokilko **séy**, Jegu **súút** etc. "meat" (JgIb 1994, 232-33). Cf. FePe ***ś/siwɜ-l'ɜ** "flesh, meat" (UEW 763) ?

3. Dr ***talay** "head" (D 3103: I - VII)
AA: CCh: Daba group ***talaŋ** "head" > Musgoy **tálã**, Daba **tàláŋ**, Kola **tálâŋ** id. (JgIb 1994, 183).
Cf. Alt: Tk ***tul(g)uŋ** "temple, plait"; cf. Chagatai **tulγum** "Haarflecht" (Räsänen 1969, 498) || Mong **toluγai** "head" || MKor **tǎikòr** "forehead" (AED #1092) ||| IE: Celt ***talo-** > Gaulish **-talos** (in proper names), Welsh, Breton **tal** "front" & ***talu-** > OIrish **taul, tul** "front" (Vendryes 1978: T 180-82).

4. Dr ***mōk-** "above, top" (D 5128: I, VI)
AA: Cu: (E) ***mug-** "head" > Tsamakko **múgaʕ-te** id. (Hayward); Burji **múg-a** "head", ? Hadiya **mug-a** "club" (Sasse 1982, 148) ||| Ch: (C) Musgu **mágе-ni** "his head" (Rohlfs), Munjuk **mok** "head" (Tourneux) = Musgu **mok** id. (Overweg).

5. Dr: Konda **musku** "topmost part, upper side (of something)" (D 5128: VI)
AA: Cu (E) ***misqaḥ** "brain" > Somali **masqaḥ**, Boni **miska'** id. (Heine), Jiddu **massihə** id. (Lamberti) ||| Om: (S) Ari-Jinka **maktsa** "brain" (Fleming).
Cf. IE ***mozgo-/*mosko-** "brain" (Pokorny 1959, 750).

6. Dr ***kann-** "cheek" (D 1413: I) & ***kenn-** "cheek, jaw" (D 1989: I, II, III)
AA ***gin-/*gun-** "face, cheek, forehead" > Cu: (N) Beja **ginúun** "gum of teeth" (Roper) = **gunúun** "jaw" (Bechhaus-Gerst) || (S) Iraqw **gineeʕi** "back of head" (Kiessling) ||| Eg (Med) **dnn.t** "Kopf" (Wb. V 576) ||| Ch: (W) Ankwe **gen**, Montol **gun** "cheek" (Jg); Gera **geni** "face" || (C) Lame **gíní** "cheeks" (Kraft) || (E) Mubi **gîn** "Stirn" (Lukas).
Cf. IE ***ĝen-/*ĝʰen-** "face, jaw" > Greek **γένυς** "jaw", Latin **gena** "Wange" etc. vs. OIndic **hánu-** "jaw" (Pokorny 1959, 381-82) ||| FeMd ***kōńV** > Finish **kuono**, Estonian **koon** "jaws, chops", Mordvinian Erzya **końa** "forehead" (SKES 241).

7. Dr ***mun-** "front" (D 5020a: I-VIII) and / or ***mind/ṭi** "eyelash, eyebrow" (D 4864: IV) & ***mīn-** "to wink, close the eyes" (D 4877: IV, VII)
AA ***man-/*min-** "forehead" > Cu: (E) Afar **minin** "eyebrow"; Bayso **munje** "mouth, lip"; Konso **miin-tá** "forehead, face", Mossiya **miín-ta** id.; Gawwada **miin-té** "Stirn, Vorderseite, Gesicht", Tsamakko **mɪn-te** "face", Alaba, Kambatta **miin-e** "forehead"; Yaaku **maŋa** "eyebrow" (Lamberti 1987, 533) ||| Ch: (C) Hina **maneno** "Stirn" (Strümpell).
Cf. IE ***mein-** "face" > Hittite **meni/a-** "face"; OIrish **mén** "mouth", Cornish **myn** id., Breton **min** "Schnauze" (Jucqois, *Orbis* 16[1967], 177-79; Tischler 1990, 197).

8. Dr ***pukk-** "cheek" (D 4242: I, III - VII)
AA ***buḳ(Vʕ)-** "cheek, head" > Cu: (E) Oromo **bóq-o'**, Konso **paq-oó-ta** "jaw"; Burji **boḳ-óo** "cheek, side" (Black 1974, 134; Sasse 1982, 38) ||| Berb: (N) Rif **abeḳḳa** "face", Kabyle **abḳa** id. (Woelfel 1955, 43) ||| Ch: ? (W) Hausa **baaki** "mouth" || (C) Bachama **bwɔkəy** "cheeks"; Banana **fokù-nà** "face" (Kraft).
Cf. Kartv: OGe **baḳo** "lip, border" ||| IE: Latin **bucca** "aufgeblasene Wange", Welsh **boch** "Wange" (W-H I, 120).

9. Dr ***muk-** "face, mouth" (D 4889: I - VI)
AA ***mak[u/i]** "mouth" > Cu: (N) Beja **muk** "stomatitis, inflammation of mouth" (Hudson) || (C) Kemant**mäkäy** ~ **məkäy** "mouth" (Sasse), Qwara **makiya**, Khamir **mika** id. (Reinisch) ||| ? Ch: (C) Gidar **mokŏ** "mouth" (Strümpell), Musgu **mágu** id. (Lukas).
Cf. IE ***mukH-** (?) "mouth, face" > OIndic **múkha-** "mouth, face", Pashto **max** ~ **mux**, Parachi, Ormuri **mux** "face", Ossetic **mūḳū** "jaws, chops" (Morgenstierne 1927, 48-49; Abaev II, 131); ? Albanian **mykë** "stumpfe Seite, Rücken" < ***mūkā** (Orel, *Zeitschrift für Balkanologie* 23/2, 148).

10. Dr ***kōr-** "tusk" (D 2257: I, III, VI)
AA ***ḳʷar[i]** "tooth" > Cu: (N) Beja **kwire** "tooth" (Roper) || ? (E) Elmolo **kárris** "cheek, molar" (Heine), Oromo **qarriifa** "canine tooth" (Gregg) ||| Om: (S) Ari-Jinka**ḳari** "tusk, tooth of hippo or elephant" (Bender) ||| ? Berb: Senhaja **aqarruš** "tooth" ||| Ch: (W) Hausa **háƙóoríi**, Kulere **ʔagweér** "tooth" etc. (Stolbova 1996, 73: ***ḥa-q̇ori** ~ ***-q̇awVri**).

11. Dr ***kevi** "ear" (D 1977a: I-VIII)

AA ***ḳab-** "to hear" > Cu: (E) ? Afar **-obb-** id. (cf. Lamberti 1987, 534; the loss of *ḳ- in Afar is regular); Dullay: Harso **ḳapaḳ**, Gollango **apaq**, Tsamakko **qabaq-** (AMS); Burji **akkab-** id. (Sasse 1982, 24) ||| Om: (N) Mocha **qäbbi-(yé)** id. (Leslau); Bambeshi **ḳeew-**, Sezo **ḳiw-e** id. (Fleming).
Cf. Ural ***kåwɨ** "ear" (Sammallahti 1988, 538) ||| MKor **kúi** "ear" (Blažek, *Archív orientální* 55[1987], 158: Dr + Ural + Kor + Tung ***xoji-pun** "ear-rings"; Starostin 1991, 276 and AED #316 connect the Kor & Tungus words with Tk ***kul-kak** "ear" || Mong ***kul-ku** "ear-wax"; cf. Ordos **xulugu** "the ear of animal" || Tung ***xūl-** "to (re)sound" || OJp **kí-k-** "to hear", reconstructing Alt ***kʻüjlu/o**).

12. Dr ***kuṛ-** "ear(-ring)" (D 1823: I, II, IV, VI)
AA ***gur[y]-** "ear; to hear" > Cu: (E) Oromo **gurra** "ear" (> Amhara **joro** id.), Konso **kurrá**, Mossiya **koworó** id. (Lamberti 1987, 534) ||| Om: (S) Ubamer **gori** "earhole" (Fleming) ||| Berb: Zenaga **gera** "to hear" (R. Basset).

13. Dr ***āli** "eyeball, pupil (of the eye)" (Zv 658: I)
AA ***ʔil-** "eye" > Eg (Pyr) **ỉr.t** "eye" (Wb. I, 106) ||| Cu: (N) Beja **liilii** id. (Roper) || (C) Kemant **il** (Sasse), Awngi **ɔ́ll** (Hetzron) etc., id. || (E) ***ʔil-** id. > Somali **il**, Burji **illa**, Yaaku **il** id. (Sasse 1982, 104; Lamberti 1987, 534) || Dahalo **ʔìla** id. || (S) Iraqw **ila**, Asa **ilat**, Qwadza **ilito**, Mbugu **i'ila** id. (Ehret 1980, 291) ||| Ch: (W) Buli **ʔiir**, Guruntum **yeren** || (C) Hidkala **ílí**, Lamang **ili**, Buduma **yil** "eye", Mandague **ʔàl** "eyes" || (E) Mubi **ʔírîn̄ì** "eye" (JgIb 1994, 126-27) ||| Berb: Shilh of Tazerwalt **álln̄** "eyes" vs. sg. *tyṭṭ* < ***t-il-t**, Ntifa pl. **alln**, Ghadames **awěl**, pl. **wallěn** (Lanfry). Cf. MEl **el(t)** "eye" (Blažek 1999, 58: Dr + AA + El).

14. Dr ***irapp-** "eyelid, eyelash" (D 5169: I-IV, VI)
AA: Cu: (E) ***ḥi**Nrib- > ***ḥirrib-** "eyelash" > Som *ḥirrib* "corner of the eye", Oromo **hirrib-a** "sleep", Konso **hirrip-a**, Yaaku **hereban** "eyebrow", Gollango **hirrip-e** "eyelash", Burji **imbír-oo** "eyelid" (Sasse 1982, 105). An old compound cannot be excluded.
Cf. FeLp ***ripse** > Finnish **ripsi**, Eston **ripse** "eyelash", Lappic Lule **rapsa** "membrane, napkin" (SKES 809).

15. Dr ***cim-** "to wink; eyelid, eyelash" (D 2545: I, II, III)
AA: Cu: ? (N) Beja **šimbehaani** "eyebrows"|| (E) Burji *ċimmiy* "to close/cover the eyes" (Sasse 1982, 48), Gedeo **himmi hass-** (**hass-** "do"), Hadiya *ṭiimbiṗṗ-*, Kambatta **timbiiṗṗ-**, Sidamo *ṭimbii'l-* id. (**ċiim-biiṗ-ḍ-**; Hudson 1989, 42 reconstructs ***ṭ-**).
Cf. Kartv ***ċam-** "twinkle", ***ċam-ċam-** "eyelash" (EWKS 496).

16. Dr ***cōṛ-** "hair, beard" (D 2894: VI)
AA ***ŝ/ĉVr-** "hair" > Cu: (N) Beja **šuraa** "pubic hair" (Hudson) ||| ? Om: (N) Dizi **saaru** "hair" (Bender) ||| Ch: (W) Hausa **shaari** & **shiro** "long hair on chest of of ram" (Skinner 1996, 184); cf. also Sem: Ugar **šrn(ả)**, Geez **śərnāy** "wheat" (Leslau 1987, 534) and Eg (MK) **šr.t** "barley" (Wb. IV, 524), if the primary semantic motivation was "hairy", cf. Hebr *śəʕōrā* "barley" vs. *śēʕār* "hair" etc.
Cf. Sum **suḫur** "cheveux; Haarschopf".

17. Dr ***īr-/*iru-** "internal organ" (D 546 & Zv 667: I)
AA ***ʔirw-** "internal organ" > Sem: Akk **ertum**, **iratum**, **irtu(m)**, gen. f. pl. **irāti** "Brust, Lunge" (AHw 386; Holma 1911, 44), Ugar **ỉrt**, New Hebr *reʔā*, Syr *rāṯā*, Arab **riʔa** "lungs", Harsusi **ʔarit**, Śheri **ʔeri**, **ʔirot** id. (Leslau, *Language* 21[1945], 233, 236) ||| Cu: (E) Burji **ír-a** "stomach"; Yaaku **ira**, pl. **irehmo'** "belly" and / or Somali **uur**, Rendille **ur** id. (Sasse 1982, 106) ||| (C) Mogrum *àrû*, Muskum **rɬ̀t** "intestins" (Tourneux) ||| Berb: (S) Ahaggar **târut** "poumon" (Prasse 1974, 215: ***t-HarūH-t**) || (N) Shilha of Tazerwalt **turtt**, pl. **turin** "Lungeflügel" (Vycichl, *WZKM* 52[1955], 319-20: Berb + Arab).

Cf. IE ***ereu-/*oreu-** "intestines" (Pokorny 1959, 782).

18. Dr ***taṛ-*** "liver" (D 3120: II, IV, V, VI)
AA ***tir[aw]-*** "liver" > Cu: (E) Saho **tiraw** (Bender), Somali Tunni **taraaw**, Jiddu **turuw** (Ehret & Nuuh), Bayso **toro**, Arbore **tirá** (Hayward), Oromo Waata **tiruu** (Heine), Konso **tíraa** (Black), Tsamakko **tír-e** "liver" (Hayward), Gedeo **tiro / tiḍo** id. (Lamberti) || (S) Mbugu **i-tirao** id. (Ehret 1980, 225) ||| Om: (S) Galila **túri** id. (Bender) || (N) Wolayta **tira** "chest", **tiriy**[a] "liver", Gamu **tira** "chest, liver" etc. (Lamberti & Sottile 1997, 523-24) ||| ? Ch: (W) Ngamo **tilì**, Bolewa **tìləw** "heart" || (C) Musgu **eteltel** "liver" || (E) Tumak **tèlū**, Ndam **taaluu** id. (Stolbova 1996, 35 reconstructs pCh ***ṭe[H]al-***) or Ch: (W) Pelchi **wà-tèra'è** "liver" (Shimizu), Pa'a **tirḳwasa** "kidney" (Stolbova 1987, 166: WCh ***ḥa-tirsa***).
Cf. IE: Celt ***tŏr(t)s-*** > OIrish **tarr** "belly", OWelsh **torr** gl. "palma", modern **tor** "belly", MCornish **tor** id., Breton **tor, teur** id. (Vendryes 1978, 33) ||| Alt: Tk ***törγöm*** "Schafdärme, Leber" (Räsänen 1969, 494).

19. Dr. ***kōl*** "belly" (D 2244: VII, VIII)
AA ***k[w]aly-*** "kidney" > Sem ***kulay-(at-)*** ~ ***kalay-(at-)*** > Akk**kalītu**, Hebrew **kilyā**, Arabic **kulya**, Argobba **kullay** id. ||| Cu: (N) Beja **ånkwél'a & unkúl'a** "kidney" (Reinisch) or **kaláwa** "interior" (Roper) || (E) ***kal-(al-)*** "kidney" > Som **kelli**, Bayso **kalaljaa**, Konso **xalli-t-ta**, Burji **kalat-t-ée** id. (Sasse 1982, 113); ECu > Dahalo **kalle** id. ||| Om: (S) Galila **kela** id. (Fleming) || (N) Wolayta **killahuwa**, Gamu-Dache **kila-ho** id. (Lamberti & Sottile 1997, 410-11), Koyra **killee** "liver" (Cerulli) ||| ? Ch: (C) Hwona **kwulìša**, Bura **kulši** "kidney" (Kraft).

20. Dr ***pōr-*** "chest, breast" (D 4592: I, III, VI) and / or Dr ***porr-*** "lungs" (D 4569: I, VI)
AA ***bar(y?)-*** "chest organ" > Cu: (E) Som **beer**, pBoni ***béèr*** (Heine) "liver" and / or Dasenech **bal** "chest, front", Burji **bár-a** "chest" (Sasse 1982, 33) || (S) Burunge **baro?o** "spleen" (Ehret 1980, 338, 320) ||| Om: (S) Dime **buru** "kidney" (Bender).
Cf. IE ***b[h]reu-*** "belly" (Pokorny 1959, 169 and / or 170-71) and also Sum **bar** "liver".

21. Dr ***mak(k)-*** "neck" (D 4622: IV)
AA ***muk-*** "neck, back" > Cu: (N) Beja **mok** "neck" (Reinisch) || (C) Bilin **məkk[w]a** "buttock" (Lamberti) || (E) Afar **makuḥ, mukuḥ** "spinal cord" (Parker & Hayward), Boni **múkkə** "buttocks" (Heine), Yaaku **muk** "lower side of body" (Ehret) ||| Eg (MK) **mkḥ3** "Hinterkopf", Coptic ⲙⲁⲕϩ "nuque, cou", cf. Eg **ḥ3** "arriére de la tête" (Wb. II, 163; Vycichl 1983, 111).
Cf. Iranian forms from Pamir: Ṣhugni, Wakhi **māk**, Sarikoli **mok**, Ishkashim **mak** "back of the neck, nape" (Morgenstierne 1974, 44) ||| Ural ***muka*** "back" (Sammallahti 1988, 538) ||| Alt: ? Tk ***boγaź*** "Kehle" (Räsänen 1969, 78) || Kor **mok** "neck, throat". Cf. Blažek, *Archív orientální* 55[1987], 159: Dr + Kor + Tk + Ural + Iranian + AA (Eg+Beja).

22. Dr ***verin*** "back" (D 5488: I-IV, VI)
AA ***war(y)-/*wury-*** "back" > Sem: Arab **warā?** "hinter", Mehri **wurā** "zurückkehren" (Müller 1975, 70) ||| Cu: (E) Oromo **wiirtuu** "spine" (Gragg); ? Sidamo, Hadiya **waro**, Kambatta **waru** "under" (Hudson 1989, 160) ||| Ch: (W) Hausa **wúyàà**, Dera **wuro**, Tsagu **wiré**, Kir **wuyar**, Kulere **wur**, Ngizim **wùrá** || (C) Higi Kamale **wuri**, Kilba **wulya**, Bachama **wura**, Daba **wẹlà**, Buduma **wuy**, Zime-Dari **yore** || (E) Migama **úrè**, Jegu **were**, Mubi **wíirẹ** "neck" (JgIb 1994, 252-53; Stolbova 1996, 90-91: pCh ***ḥa-wuyar***) ||| ? Eg (Gr) **i̓w3y.t** "Kehle (des Gegners, die durchbohrt wird)" (Wb. I, 49) ||| Berb: (N) Central Morocco **awəru** "derriére" (cf. Cohen 1947, #509).

23. Dr ***car(r)-*** "neck" (D 2419: I(?), III, V)
AA ***sar-/*sir-*** "back, neck" > Sem: Arab **sarāt** "back", Harsusi **sār** "behind, after" etc. ||| Cu: (N) Beja **sára** "back" (Reinisch) || (C) Khamir **səra** "back" (Reinisch), Awngi **sər** "lower part" (Hetzron) || (E) Afar **sàrra** "back, rear" (Parker & Hayward), pBoni ***sàríd*** "backside of chest" (Heine), Burji **saro** "tail" (Hudson), Yaaku

sɛɛrɛy "below, down" (Ehret) || Dahalo **sàre** "back" (Tosco) || (S) Burungi **sira** "buttocks" (Ehret) ||| Eg (Pyr)**s3** "back", Coptic **COI** "dos" (Wb. IV, 8; Vycichl 1983, 185).
Cf. MEl **šara** "under" (Blažek 1999, 59: AA + El) ||| ? IE: Tocharian B **sark** "back (of the body), A **särśi** "backbone" ||| FU: Permian ***śörV** > Udmurt **śör** "hinder, beyond", further in **sil'śör** "nape of the neck" (**sil'** "neck"), Komi **śör** "Hinterraum" (KESK 270) ||| Alt ***sirtV** > Tk ***syrt** "neck; mountain plato" (Räsänen 1969, 419) || Mong: Khalkha **serten** "spine ramification" || Tung ***sigde** "spinal vertebra; mountain ridge" || OJp**siri** "buttock" (AED #1010).

24. Dr ***cērk-** "back of the neck" (D 2817: VI)
AA ***čahr-** > Sem ***ṭahr-** "back" > Akk **ṣēru** "Rücken, Oberseite", Eblaite **za-lum [ẓahrum]**, Arab **ẓahr** "back", Mehri **ṭahar** "on" etc. (Müller 1975, 64, #10: Sem + Sumray) ||| Cu: (E) ***ċeer-** > Bayso **ṭeere** "buttocks" (Hayward), Konso **ɟeera** "shame", Dirayta **ḍeer-ta** "vagina", Oromo **ṭeeri'** id., Sidamo **ṭeere** "anus" (Haberland & Lamberti 1988, 144) ||| Om: (N) Zayse **ḍeere** "buttocks" (Lamberti) ||| Ch: (W) Hausa **tsara** "middle of the back" (Skinner 1996, 269) || (E) Sumray **tàríny** "back", Ndam **tàr**, Mokilko **dár** etc. id. (JgIb 1994, 7).
Cf. IE ***ster-(g^{wh}-?)** > Latin **tergum** "back", **tergus, -oris** "harte Rückenhaut der Tiere, Fell, Rücken", Greek στέρφος "Rückenhaut der Tiere, Fell, Leder" (W-H II, 670)

25. Dr ***cu(k)-** "nape of the neck" (D 2696: I, VI, VIII)
AA ***s/čug-** "back, shoulder" > Cu: (C) Bilin **säg** "shoulder(-blade)", Khamir **sig** "shoulder, hinder part" (Reinisch), Khamta **sig** "back" (Conti Rossini) || (E) ***sug-** > Dasenech **sug-u** "back", Oromo **fugiso** "upside down" (Sasse, *AuÜ* 59[1975-76], 127-28).
Cf. Alt ***süγ-** "back of the neck" > Tk ***süg-sün** "hinder part of the neck" || Tung ***süg-li** "mane" (Dybo 1989, 200).
Alternatively AA ***[ʒ]i/uk-** "shoulder" > ? Cu: (E) Arbore **zéh** "nape of the neck" (Hayward), Kambatta **zakko** "back" (Hudson) || (S) Mbugu **ki-zóga** "shoulder" ||| Om: (N) Wolayta **zokkuwa** "back", Gamu **zokko**, Dawro **zokke**, Kachama **zaahe**, Koyra **zahi** (cf. Arbore) id. (Lamberti & Sottile 1997, 560) ||| Ch: (C) Mada **adzak**, Mboku **dzugwạm** "neck" (Mouchet) || (E) Ndam **jikám** "my arm" (Lukas) ||| Berb: Tamazight **tazukt** "buttock, hip, thigh"; Ahaggar **aγəzzuk** "top part of the groin" < ***aγəs** & **zuk** "bone & back".
Cf. IE ***steig^{w}-** "shoulder, shin" (Pokorny 1959, 1018) ||| Alt ***ʒuχan-** > Mong ***ʒuγan** "waist part of backbone" || Tung ***ʒokon** "a hollow between shoulder-blades, an inner corner" (Dybo 1989, 199).

26. Dr ***pVṭ-** "nape, back" (D 4146: I, II, III, V)
AA ***bu[ʕ]d-** "shoulder" > Sem: Akk **būdum** "Schulter", Eblaite **bù-tum** (Krebernik 1983, 36) ||| Cu: (E) Oromo Macha **booda** adv. "back" (LVC); Sidamo **buuda**, Hadiya **buudo** "arm, shoulder" ("braccio") besides "horn" (Cerulli); only the latter meaning was recorded for Burji **buudá**, Kambatta **buuda** (Hudson 1989, 81) ||| Om: (S) Ari-Jinka **bud** "upper back, back of thorax" (Bender), Ubamer **buɛd(a)** "back" (Fleming) ||| Ch: (C) Zelgwa **bīdạ** "throat" (Mouchet) || (E) Tumak **bèd** "arm" (Caprile), Ndam-Dik **bād** id. (Jg).

27. Dr ***kump-** "back" (D 1747: I)
AA ***gabb-/*gubb-** "back" > Sem: Ugar **gb** "back (animal, human)", Hebr **gab**, Jewish-Aram **gabbā** id. || (E) Gedeo, Kambatta **gooba**, Sidamo **goob(b)a** "neck" (Hudson 1989, 104); Oromo Wellega **gooba** "hump of cattle" (Gragg) ||| Om: (S) Dime **gumb** "back" (Fleming) || (N) Kafa **gubbo** (Cerulli), Mocha **gúbbo** "back of the body" (Leslau) ||| Ch: (C) Gidar **gə́bbo** "buttock" (Mouchet).

28. Dr ***kol-** "tail" (D 2135: VII)
AA: Om ***gol-** "tail" > (S) Ari **go(o)l-i**, Hamer **gul-i**, Dime **go(o)l-an** id. (Bender) || (N) Basketo **gɔlʸsi** (Bender), Dokka **golse** (Fleming), Dawro **goilano**, Wolayta **goyna** etc. (Lamberti) ||| Berb: (N) Seghrushen **ažlal**, Menacer **ažlāl** "tail" (Destaing).

29. Dr ***tūv-** "bird's tail" (D 3393: I, II, III, VI)

AA ***dub(y)-** "tail, back" > Sem: Mandaic **dibra** "back, tail", Arab **dubr** "back, neck" ||| Cu: (E) ***dib-/*dub-/*dab-** "tail" > Somali **dab-o** id., **dib** "short tail of goat", Rendille **dub** "tail", Boni **tib** id., Bayso **deb-e** id., Elmolo **dup** ~ **tup**, Oromo **duub-a** "back, behind", Konso **tup-a** "behind" etc. (Sasse 1982, 57) ||| Om: (S) Karo **dibini** "tail" (Fleming), Banna **doobanna** id. || (N) Dawro **duuṃiya** id. (Bender) ||| Ch: ? (W) Angas-Chip **dəp**, Ankwe **däp** (Kraft), Sura **dúp** (Jg) "penis" (metaphorically "tail" ?) || (C) Mofu **dubạ**, Gidar **dúbọ**, Musgu **dəbạ** (Mouchet), Gisiga **duba** "back", Gulfei **dabé** "buttock" (Lukas), Zime-Batna **dub** (Jg) || ? (E) Kwang **tə̀wá** "back" (Jg) ||| ? Berb: (S) Iulemidden **tedémbut** "tail" (Barth).
Cf. NEl **tipi** "neck" (Blažek 1999, 59: AA + El).

30. Dr ***pull-** "penis" (D 4309: I, III)
AA ***bulḫ-** ~ ***bull-** "penis" > Eg (Med) **b3ḫ** id. (Wb. I, 419) ||| Cu: (E) Arbore **balla**"penis" (Hayward), Burji **bulúkk-oo** "testicle" (Sasse); ECu > Gurage of Soddo **bəllət** "penis" (Leslau) ||| Om: (S) Dime **bullo** id. (Bender) || (N) Basketo **búlli**, Dokko **bulli** "penis" (Fleming) ||| Ch: (W) Hausa **bùùráá**, Bolewa **bola**, Bokkos **ɓwél** id. (Jg) || (C) Bata-Garwa **bolle** id. (Strümpell), Gulfei **belewe** id. (Lukas) || ? (E) Dangla **pɛ́:lɛ** id. (Fédry) ||| Berb: Sus **abellu**, Warain **abelul**, Rif **abrur** id. (Woelfel 1955, 47).
Cf. Kartv ***bil-** "Vogelkamm; Knospen am Baum; Penis" (EWKS 55) ||| IE ***b^{h}i̯-no-**"membrum virile" (Pokorny 1959, 120-21) ||| FU ***pol'a** "tail" (UEW 393-94) (Dolgopolsky 1995: Nostr ***bo/ulya** or ***bo/uliHa**).

31. Dr ***kunn-** "penis" (D 1697: I, II)
AA ***gun(y)-** "penis" > ? Cu: (E) Dasenech **gun-u**, pl. **gunt-i** "testicles" (Tosco) ||| Ch: (W) Ngizim **gɨ̀nyɛ**, Bade **gə̀nyáan** "penis" (Kraft) || (C) Pidlimdi **gwùn** id. (Kraft).

32. Dr ***māṇi** "penis" (D 4805: I)
AA: Cu: (E) ***man-/*mun-** "penis, vagina" > Bayso **man-to** "penis", **man-tiiti** "vagina" (Hayward), Oromo **mundo** "penis", Gedeo **mii'no** id. (Hudson), Burji **múnn-aa** "vagina" (Sasse 1982, 149).

33. Dr ***kant-** "membrum muliebre" (D 1210: I)
AA ***ḳand/ṭ-** "glans penis, clitoris" > Cu: (N) Beja **kanṭal** "penis" (Roper) || (E) ***qanç-** "gland" > Somali **qanj-iḍ** "lymphatic gland", Konso **qanḍ-itta** "udder; swollen or abnormally big gland", Burji **ḳándi** "clitoris" (Sasse 1982, 124) || Om: (S) Ari, Galila **qanti** & **ḳanti** "testicles" (Bender) ||| ? Ch: (C) Pidlimdi **kândi**, Boka **kaândə̀** "vagina" (Kraft) || (E) Lele **gúnjùló** "testicles" (JgIb 1994, 323).

34. Dr ***kūti** "pudendum, membrum muliebre" (D 1888: I, II)
AA ***ḳuṭ-** "vulva, penis" > Cu: (C) Khamir **x^{w}əda** "pudenda mulieris; anus" (Reinisch); ? CC > Amh **ḳiṭ** "anus" (cf. Dolgopolsky 1973, 249) || (E) Som **qooḍ** "penis cum testiculis" (Abraham) ||| Ch: (W) Hausa **ƙóódə̀** "testicles", Karekare **gáwḍyá** id. || (C) Gava **ḳiḍinwa** id., Wandala **kuḍa** "penis" (Kraft), Masa **húḍá** "testicles" etc. (JgIb 1994, 323; Stolbova 1996, 66: pCh ***ḳo?ud-**).

35. Dr ***cūtt-** "pudendum muliebre, penis, anus" (D 2724: I, VI)
AA ***Sit-** "buttocks; vulva" > ? Sem ***šit-** "buttocks", cf. Jibbali **šét** "privates", Mehri **šīt** "vulva" ||| ? Cu: (E) Som Rahanwen **šittoo** "vulva" (Reinisch, Cerulli) ||| Om: (N) Yemsa **seetoo** "hymen"; Kafa **šittoo** (Cerulli), Mocha **šiitto** "vulva" (Leslau); Kachama **setto** "clitoris" (Conti Rossini) ||| ? Eg (Med) **šd** "vulva" (Wb. IV, 566) rather than (Pyr) **sd** "tail" compatible with Dullay (ECu) **síitó** "tail" (**t** < ***d**) and Kachama (NOm) **suto** "buttocks" (Conti Rossini), Yemsa **suutaa** "neck" (Cerulli).

36. Dr ***kolli** "pudendum muliebre" (D 2138: I, II, III)
AA ***gul[ʕ]i** "vagina" > ? Sem: Mehri **gəlōt** "clitoris", Jibbali **giźʕɔ́t** id., cf. Arab **ǧaliʕa** "to be obscene" (see Leslau, *Language* 21[1945], 242) ||| Cu: (S) Iraqw **gwalay** "vagina", Qwadza **gula?iko** id. (Ehret 1980, 372) ||| Ch: (C) Bachama **gule** "vagina"; Musgu **gíli** "weibliche Scham" (Lukas).

37. Dr ***kī[c]-** "pus, mucus" (D 1606: I-IV, VI-VIII)
AA: Om: (N) Kafa **giiyoo**, Mocha **gɛyo**; Kachama **giššee** "pus" (Leslau 1959, 34).
38. Dr ***ecc-** "saliva, pollution" (D 780: I, III, VI, VII)
AA ***ʔayS-/*ʔawS-** "excrements, urine" > Cu: (N) Beja **iš** "urine", **oš** "to urinate" || Om: (N) Kachama **oyšaa** "sterco di vacca" (Conti Rossini) || (S) Dime **ʔuš** "feces, dung" (Bender) ||| Ch: (W) Kofyar **ès** "feces", Zaar **yi:s** id. || (C) Zime-Batna **ʔísi** "dirt, dregs" || (E) Sokoro **íssī**; Jegu **ʔiš** "feces" etc. (JgIb 1994, 128-29).

39. Dr ***kāl-** "leg, foot" (D 1479: I-VI, VIII ?)
AA ***kal(w)-** "foot, leg" > ? Om: (N) Mao **kelli** "bone" (Grottanelli) ||| Ch: (C) Gulfei **kalē** "feet"; Masa **kūl** "Bein" || (E) Tumak **de-gəl** "foot, leg", Sumray **de-gel-ám** "thy foot", cf. **di-lés-um** "thy tongue" (Lukas).
Cf. Kartv ***q̇wil-** "bone of upper arm" (EWKS 415) ||| IE ***kaul-/*kul-** "bone; femur" (Pokorny 1959, 537) ||| Alt: Mong ***köl** "foot" || Tung ***xol-ŋu-** "shin-bone" (Dybo 1988: 123).

40. Dr ***aṭ-** "foot(print)" (D 72: I-III, VI)
AA: C: (E) ***ʔad-** "leg, thigh" > Som **addin** "leg", Boni **íddi** id. (Heine 1982, 115: pSam ***áddìm-ó**) || ? (S) Iraqw **oriya** "thigh" (Ehret 1980, 334: Som + Iraqw).

41. Dr ***kōcc-** "bone" (D 1288: VII)
AA ***ḳasy-** "bone" > ? Sem: Ar **qassa** "to pick a bone entirely and suck it out" (Steingass 835) and / or **qaṣṣ** "breastbone" (< ***qass** ?) ||| Cu: (E) Dasenech **ḳas** "Bein" (Haberland) = **k/ḳ/ɣ́s** "foot" (Fleming) ||| Om: (S) Dime **ḳöss** (Bender) = **ḳüs** (Fleming) "bone" || (N) Nao **ḳus** id., Shako **'us**, Dizi **us** id.; ? Hozo **käši** "foot" (Fleming) ||| Eg (Pyr) **ḳs** "bone" (Wb. V, 68) ||| Berb ***a-qisi**, pl. ***i-qisīy-un** "bone" (Vycichl 1978, 73) > (E) Siwa **aɣes** (Laoust), Ghadames **ɣess** (Lanfry) || (S) Ahaggar **eɣäs** (Prasse) || (N) Kabyle **iɣes(s)** (Dallet) || (W) Zenaga **i'ssi** (Nicolas) id. ||| Ch ***ḳas[i]** "bone" > (W) Hausa **ḳàšíi**, Kariya **ḳáásù**; Bokkos **kyas** || (C) Musgu **keŝ-ke** || (E) Dangla **kààsò** etc. (Stolbova 1996: 65-66).
Cf. IE ***kos-t-** "rib / bone" (Pokorny 1959, 616) ||| FePerm ***kaskV** "backbone" (UEW 648). Illič-Svityč (1971, #219) did not take into account the Dravidian (& Omotic) data.

B. Human society

42. Dr ***maka** "child" (D 4616: I-VII)
AA ***mak^{w}-** "young man / woman" > Cu: (C) Qwara **mäk^{w}ət**, Dembea **mekut** "Jüngling" (Reinisch).
Cf. ? IE: Celt ***ma(k)k^{w}-** "son" (Pokorny 1959, 696) ||| ? Ugrian: Mansi **moki**, **mokh** "child, descendant; belly" (Munkácsi) ||| ? Alt: Tung ***muxan** "(young) male" (TMS I, 543).

43. Dr ***pār-** "child, young animal" (D 4095: I, III, V)
AA ***bar-** "child" > Sem ***bar-** > Bibl-Aram **bar**, Mandaic **bra** "son", Mehri, Soqotri **bər**, Jibbali **bṝ** id. (Johnstone)||| Cu: ? (E) Afar / Saho **báḍa** "son" vs. **baḍa** "daughter" (***bar-t-**?) (Parker & Hayward / Welmers) or Rendille **báar** "brother(s)-in-law, wife's brotther(s)" (Galboran & Pillinger) || Dahalo **ɓóóreeṭe** "boy" || (S) Mbugu **mburatú** "older boy, young man" (Ehret 1980, 138) ||| Berb: Ahaggar **abaraḍ** "boy" (Foucauld) ||| Ch: (W) Hausa **béérà** "young girl"; Angas **par** "child"; Fyer **ƀarà** "child", cf. (C) Glavda **virđ** "to create"; Zime-Batna **vərà'à** "to give birth" (Stolbova 1996, 25).
Cf. IE ***b^{h}er-** "child" (Pokorny 1959, 131-32: apud ***b^{h}er-** "to bear") ||| Kartv ***ber-** "child" (Illič-Svityč 1971, #32: Sem+ ECu+Berb + Kartv + IE).

44. Dr ***koṛ-** "young (of animal), child" (D 2149: I-VIII)
AA ***ḳ/k^{w}ar-** "boy, child" > Cu: (C) Bilin **q^{w}ər** "boy", **'əx^{w}ra**, pl. **'əq^{w}ər** "son / daughter" (Palmer), Kemant **xura** "child" (Zelealem) etc. (Dolgopolsky 1973, 83) ||| Ch: (C) Mafa **k(ə)râ** "child"; Daba **krə** id. || (E) Sumray **gòrən** "son" (JgIb 1994, 74-75; concerning **g-**, cf. **guseŋ** "bone" < ***ḳ-**).

Cf. IE ***kur-** > Kurdish **kur** "youngster", Pahlavi **kurrag**, Farsi **kurra** "foal"; Armenian **kᶜowṙak** id.; Hittite **kurka-** "foal, colt"; Greek κύρνος "bastard son" (Hesych.) (Forssman, *KZ* 94[1980], 70-74; Puhvel 1997, 267-68) ||| Alt: Tk ***kȳŕ** "girl" (Räsänen 1969, 269).

45. Dr ***iḷ-** "young" (D 513: I-VIII)

AA: Cu: (E) ***ʔil(V)m-** "boy, son, child" > Som **ilmo** "small boy", Boni **éleŋ** "boy" (Heine 1978, 87), ? Rendille **ilím** "seeds" (Heine 1981, 190); Oromo of Wellega **ilma** "son" (Gragg) ||| ? Ch: (W) Bokkos **ʔál** "child"; Mburku **líí** "son" || (E) Mokilko **ʔùló** "child" (JgIb 74-75).

Cf. FU ***ilmV** "man" > Finnish **ilminen** "man, homo", Lappic Lule **ălmaťś** id., Norwegian **âlmâš** "person", Mansi **ā̆l'ém-χ̮alés** "man, homo" where χ. also means "man" (SKES 105).

46. Dr ***cēṛ/r-** "in-law" (D 2819: III, IV, VI)

AA ***s[i]rw-** "relative, in-law" > Cu: (E) ***sVr-** > Saho **sera** "Genosse, Freund" (Reinisch), Som **saar** "Mitglied des Gefolges", Oromo **fira** "relative, friend" (> Konso **fira** "relative, guest"), Dirayta **sura** "relative", Hadiya **sulla** id. (Sasse, *AuÜ* 59[1975-76], 126) ||| Ch: (W) Hausa **sùrúkíí** "father of husband's wife"; Ankwe **s'uur**, Angas **siir**, Kofyar **sɔghɔr** "in-law" (metathesis ?); Karekare **sȁkwȁr** id. (metathesis ?); Ngizim **sȁurák** id. || (C) Tera **sərvəkẹ**; Bata **sẹ́rwa**, Bachama **šerwey**; Mafa **súkwár**; Daba **sùkúl** (metathesis ?); Musgu **súlā** etc. id. (JgIb 1994, 206-07; cf. Newman, *Afroasiatic Linguistics* 5/1[1977], 28, #74; Newman, *Journal of African Languages* 5[1966], 236, #52).

47. Dr ***melk-** "in-law" (D 5081: VII)

AA ***mu[ ]al** "brother / sister in-law" > Cu: (N) Beja **m'aali** "brother / sister-in-law" || (E) Hadiya **mollo** "(close) relative" (Hudson) ||| Om: (S) Kara **mulʔa** "family, kin" (Fleming) ||| Ch: (W) Angas **mwŏl** "brother", **māl** "sister" (Foulkes); Bolewa **mol** "younger brother", **molle** "younger sister" (Benton), Karekare **málú** "brother" (Jg) || () Gamargu **mělē** "elder brother" (Barth / Benton), Glavda **máál** id., Dghwede **mílè** id.; Gidar **mə́lmu** id. (JgIb 1994, 48; cf. Greenberg 1963, 53, #14: Beja + Ch).

48. Dr ***nāk-** "female" (D 3634: I-III, V?)

AA: Cu: (E) ***naag/k-** "woman, wife" > Som **naag** "woman", Boni (Jara) **naág** id. (Heine).

Cf. Tung ***nekūn** "younger relative" (TMS I, 617-18).

C. Fauna

49. Dr ***yaṉ-** "elephant" (D 5161: I-VI) - if derived from ***iyan** < ***ciyan** < ***cigan** ?

AA ***ʒ́igʷan/r-** "elephant" > Cu: (C) ***ʒ[i]xan-** > Bilin **jana**, Kemant **ʒ́ana**, besides **zəhon** < Amh **zähon** (Zelealem), Khamir **zɔhón** (if it is not borrowed from Amh too), Falasha **djáni** (Beke), Awngi **ənní**, besides **zəhón** < Amh (Hetzron), Kunfäl **eni** (Cowley) id.; some Agaw language or directly a protolanguage was a source of the Ethio-Semitic denotation of "elephant": ? Tigray **zəhol** (Reinisch 1887, 181); Gafat **zohúniš** (Beke), Amh, Argobba **zähon**, Gurage: Masqan **žäxʷänä**, Endegeň, Gogot **žähonä**, Chaha, Ennemor, Gyeto **žäxʷärä** id., besides Selti **dähano**, Wolane **dähäno** id., and also Harari **doxon** (Leslau 1979, 721) - the **d**-forms are probably of ECu (Afar-Saho ?) origin || (E) Afar **dakȁnu** (Parker & Hayward), Saho **dakaano**, pl. **dakun** (Reinisch); Som **dagon**, pl. **dagomo** (Reinisch); Gedeo **daana'è**, Alaba **zanóo**, Qabenna **zänóo**, Tembaro **zänoo-čču** (Leslau, *AuÜ* 63[1980], 120, 125) Hadiya **daane-cco**, Kambatta **zanee(-ccu)**, pl. **zanaakata**, Sidamo **daan-ico**, pl. **daaniwo** id. (Hudson 1989, 56: pHECu ***ʒaane**); Yaaku **sogóm-èẹ** (Heine; cf. Sasse, *AuÜ* 59[1975-76], 135: Yaaku + Dahalo) || Dahalo **dokóómi** id. (Tosco) = **ḏokkóómi** id. (Ehret)|| (S) Iraqw **daŋ**, Burunge, Alagwa **daw** id. (Ehret 1980, 176) ||| Om: (S) Hamer **donger**, Bako **dongor** (Fleming) || (N) Zayse **dongor** (Cerulli), Wolayta, Zala, Basketo, Dawro etc. **dangar-sa**, Gamu **dangar-si**; Kafa **dangiyo**, Mocha **dengawo**, Anfillo **dangec-co**, Shinasha **dangeš-ša** (***danger-**); Nao, Maji **door**, Shakko **doroo** etc. (Lamberti & Sottile1997, 344-45), besides Bambeshi **toŋgile**, Sezo **toŋili**, Hozo **taŋgil** (Fleming) with puzzling **t-**; Yemsa **zakno**, **zahna** (Cerulli), Koyra **zákka** (Hayward), Kachama **zaakka** (Conti Rossini), Ganjule etc. **zakka** id. (Fleming) probably represent Ethio-Semitic borrowings ||| Ch: ? (W) Kariya**tákyál** || (E) Tobanga **dūgūrù** (Jg),

Sokoro **dógol** id. (JgIb 1994, 124-25) ||| ? Eg **dnhr**, Demotic **tnhr** "elephant" (Müller, *WZKM* 10[1896], 203-05) - see Blažek 1994, 199-200: AA + Alt.
Cf. Alt ***ǯigan*** "elephant" > Tk: Chagatai **jiγant**, MTk **jaγan**, Tuvin **čān** etc. id. (Räsänen 1969, 177-78) || Mong ***ǯigan*** id. (if it is not borrowed from a Turkic *ǯ*-dialect).

50. Dr ***alli-yan-*** "female elephant"
AA ***ʔalw-/*ʔaly-*** > ? Sem: Akk **alû** "mythical giant gull", perhaps "wisent; Bison bonasus" (Diakonoff, *Altorientalische Forschungen* 8[1981], 32: Akk + Berb), cf. Sum **alim** "wisent" ? (AHw 39, 36) ||| Cu: (E) pBoni ***àlíshì*** "female elephant" (Heine 1982, 104) ||| ? Berb ***Hiliw*** > Ahaggar **êlu** (Prasse 1974, 125), Iulemidden **eləw**, Ayr **iləw** (Alojaly); Zenaga **əžəh** (Nicolas) "elephant".

51. Dr ***pōri*** "bull" (D 4593: I, II)
AA ***par(r)-*** "bull" > Sem ***parr-*** > Akk **parru** "Lamm, Jungschaf", **parratu** "weibliches Lamm", cf. also **pārum** "ein Rind" (AHw 834, 836), Ugar **pr** "young cattle", **prt** "young cow", Hebr **par** "bull, bullock, steer", **pārā(h)** "cow", Jewish Aram **par^{ə}ṯā** id., Syr **par-ō** "ewe lamb", Arab **farr** "calf", **farīr**, **furār** "lamb, wild calf, young gazelle", Mehri **fōr** "bull" (Aistleitner 1965, 159-60; Klein 1987, 522; Fox, *Zeitschrift für Althebraistik* 11[1998], 20; he separates it from the word ***par(a)ʔ-*** "onager") ||| Ch: (C) Margi **fúr** "buffalo" (Hoffmann), Kilba **fur** id. (Meek) ||| Eg (MK) **pry** "Bezeichnung des Kampfstiers" (Wb. I, 526). Orel & Stolbova (1994, 418, #1950) mention isolated Mbara (CCh) **fàràỳ** "bétail, dot", i.e. "bride wealth" (Tourneux, Seignobos & Lafarge 1986, 260).
Cf. Kartv ***pur-*** "cow" (EWKS 363) ||| IE ***por(w/stH)i-*** "young bull, calf" (Pokorny 1959, 818) - see Bomhard & Kerns 1995, # 50: Sem + Kartv + IE + Dr; Dolgopolsky 1995: Nostr ***[m̥]ori*** "(female, young ?) ruminant artiodactyl (esp. bovine)" > AA + Kartv + IE + Dr.

52. Dr ***mar-*** "deer, bison" (D 4724: I, III ?, VI) and / or ***mūri*** "bull, cow" (D 5041: I, VI)
AA ***mar[w]-*** "bull, ram, goat, calf" > ? Sem ***ʔimar-*** > Akk **immeru(m)**, Assyr **emmeru(m)** "Schaf, Widder", **immertu(m)** "Mutterschaf" (AHw 378), cf. **mīru(m)**, **mēru(m)** "Zuchtstier", **mīrtu(m)**, **mērtu(m)** "Zuchkuh" (AHw 658) ?; Ugar **ỉmr** "lamb", Phoen ***ʔimr***, Bibl-Aram ***ʔimm^{e}rā***, Arab ***ʔimmar*** id. (Aistleitner 1965, 24-25)||| Cu: (E) Afar **maruw/y**, pl. **marwa** "ram" (Parker & Hayward), Saho **maru** id. (Welmers); Rendille **máar** m., **maár** f., **maaró** pl. "calf" (Galboran & Pillinger), Arbore **maar** "calf" (Hayward); Hadiya **moora** "calf; ox, bull", Kambatta **baa'l-mmora** "older calf" (Hudson) ||| Om: (N) Wolayta **mara** "offspring of sheep or goat", Gamu **mara** "calf", Shinasha **mereera** "sheep" (Lamberti & Sottile 1997, 465) ||| ? Eg (Greek) **mr(y)** "Kampfstier", **mr.t** "schwarze Kuh" (Wb. II, 106) ||| Ch: (W) Tangale **mara** "large castrated he-goat" (Jg); Polchi **maar** "goat", Buli **mar**, Dira **marẹ** id. (Kraft); Bokkos **maray** "ram" (Jg) || (C) Mafa **mari** "bull" (Kraft), Gidar **múrgọ** "he goat" (Mouchet). See Militarev 1990, 38: Sem + Saho-Afar + SBauchi.
Cf. Sum **amar** "calf" (Militarev 1984 ms.: Sum + AA).

53. Dr ***kaṭ-/*kiṭ-*** "male of sheep or goat, he-buffalo" (D 1123: I, II, III, VI, VII, VIII)
(i) AA ***gady-*** > Sem ***gady-*** "kid, goat" > Akk **gadū**, Ug **gdy**, Punic **gdʔ**, Hebrew **g^{e}dī**, Aram **gadyā**, Ar ***ǧady*** (Cohen 1970f, 100) ||| Cu: (E) Oromo of Borana **gadamsa** "antelope kudu" (Stroomer), Sidamo **godanné**"sheep, lamb" (Hudson) ||| Ch: (W) Gera **gadere** "bushbock", Ngizim **gaduwa** "antelope duiker" (Skinner) or
(ii) AA ***ḳid-/*ḳayd-***: Berb***γayd-*** "kid" > (E) Siwa **iγīd** "ram", Sokna **iγid** "kid" (Laoust) || (N) Kabyle **iγid** id. (Dallet) || (S) Ayr & Iulemidden **eγăyd** (Alojaly), Ahaggar **eγäyd** id. (Prasse) || (W) Zenaga **igédi** id. (R. Basset); cf. further the Sem forms as Akk **nāqidu(m)**, Hebrew **nōqēd**, Syrian **nuqdō** "shepherd", Arab **naqad** "sheep of weak race" and Om: (N) Kafa, Mocha **qiddo** "shepherd, herdsman" (Leslau) - cf. Militarev 1990, 49.
To both these etymons there are interesting parallels in IE: (i) IE ***g^{h}aid-*** > Shugni **gidik** "ram" < ***gaidika-***; Latin **haedus**, Sabin **faedus** "he-goat", Germanic ***gait-*** "goat"; ***kad-*** > Middle Irish **cadla**, Middle High Germanic **hatele** "goat", ONorse **haðna** "young goat" (cf. Boutkan & Kossmann, *JIES* 27[1999], 89-90), although AA ***-d-*** & Dr ***-ṭ-*** imply Nostr ***-d-*** > IE ***-d^{h}-***. From this point of view, AA ***gady-*** agrees with Germ ***kidja-*** "kid" < ***gid^{h}yo-***; now the initials do not correspond.

54. Dr ***yāṯu** "sheep, goat" (D 5152: I, II, III, VI, VII, VIII); cf. also ***iṯ-** "herdsman caste" (D 450: I)
AA ***ʕayd-** > Cu: (E) Saho **ʕeydo** "sheep" (Welmers) = **ʕeydo/ʕiido** id., besides **ida** "female adult sheep" (Lamberti), Asa-Lisan **ʕidoo** pl. "sheep" (Conti Rosini), Afar **ida** "ewe" (Parker & Hayward); Som **aḍi** "sheep and goats", but **ido** "flock of sheep" (Abraham), Rendille **ádi** "goats, sheep", pl. **adéy** "flocks/herds of sheep & goats" (Galboran & Pillinger), Bayso **idaado** & **ḍidaado** "sheep" (Haberland & Lamberti); Arbore **ʔeḍí** "sheep and goats" (Hayward), Elmolo **édi** "goat" (Heine), Dasenech **ʔeḍe** "goat" (Tosco). The unexpected **-ḍ-** is perhaps connected with a compensatoric loss of the initial ***ʕ-** ||| ? Berb: (S) Ahaggar**ădaida**, pl. **idaidân** "chevreau cuit sous la cendre" (Foucauld; Militarev 1984, 58: ECu + Ahaggar + Sum **udu** "sheep", but it is better compatible with Siwa **audād** (Laoust) || Ahaggar **ûdad** "mouflon" < pTuared ***Hūdād**, cf. Prasse 1974, 70). Cf. MEl **hidu** "sheep" (McAlpin 1981, 97: Dr + El; Blažek 1999, 64: Dr + AA + El).

55. Dr ***ciṅk-** "antelope" (D 2504: I, II, III)
AA ***ʒink^{w}-** "gazelle, antelope" > Berb: (E) Ghadames **azenkəḍ** (Lanfry), Sokna **azənkot**; (N) Semlal **azənk^{w}əḍ** (after Militarev); (W) Zenaga **ažîkad** "gazelle dorcas" (Nicolas); (S) Ahaggar **ăhənkoḍ**, Iulemidden, Ayr **azənkəḍ** "gazelle" (Prasse 1969, 60, #319: ***z-n-k-ḍ**) ||| Ch: (W) Hausa **zánkéé** "buik duiker"; Angas **zŭng** "the *kanki* antelope" (Foulkes) || (C) Kilba **nzáŋ** "gazelle"; Lamang **zəghàaŋà** id. (Stolbova 1996, 130).

56. Dr ***kaṛut-ay** "ass" (D 1364: I-V, VII)
AA ***k/ḳ^{w}ar-** "ass" > ? Sem: Jibbali **qérāḥ** "donkey" (Johnstone 1987, 235 connects it with Mehri **qərāḥ** "hornless"; cf. CJibbali **qérḥ** "to all the hair off") or Arab **ʔakurr** "colt, foal", dial. **kurr** "young of an ass" (cf. Militarev 1990, 46) ||| ? Cu: (E) Dasenech **kirif** "male donkey" (Tosco) ||| Om: (N) Chara **kuro**, Bench & She **kur**, Kafa, Anfilla **kuro** "ass" (Cerulli), Mocha **kúro** id. (Leslau) ||| Ch: (W) Karekare, Bolewa **koro**, Ngamo **kɔrô**; Ngizim **kwara**, Bade **koro** "ass" (Kraft) || (C) Tera **kooro** (Newman), Chibak, Margi **kwara**, Kilba **kwárá**, Bachama **kwarɛytò**, Massa **kɔrɔta** (Kraft), Buduma **koro**, Ngala **kooro** etc. (cf. Sölken 1967, 237) || (E) Tumak **kòrā** (Caprile), Sumray **korá** (Friedrich), Nangire, Dormo, Kabalai **kurá**, Gulei **kuru** etc. id. (Lukas 1937, 79, 89, 91, 92, 94). A mutual influence of the Chadic forms and Kanuri **koro** id. is more than probable.
Cf. IE: Old Indic **khára-**"ass", Avestan **xara-** id., Khotanese **khara-**, Pashto **xár**, (Middle) Persian **xar** id. (Eilers, *Welt des Orients* 2[1959], 467, fn. 1 derived the Indo-Iranian forms from Akk [Mari]**ḫârum** id. vs. Akk **ajarum** < WSem ***ʕayaru(m)** "ass" - cf. AHw 328); Alb **kërr** id. (Orel, *Zeitschrift für Balkanologie* 28[1987], 147).

57. Dr ***ivuḷi** "horse" (D 500: I, VIII), originally perhaps "onager; Equus hemionus", the only equid native in South Asia while the horse (*Equus caballus*) was introduced into South Asia after 2000 BC (McAlpin 1981, 147)
AA ***ʔibil-** ~ ***ʔilib-** > Sem ***ʔibil-** "camel" > Akk **ibilu**, Syrian **hebaltā**, Arab **ʔib(i)l**, Thamudic, Safaitic, Sabaic **ʔbl**, Śheri **iyél**; cf. also Arab **ʔalab** "rassembler les chameaux" (Cohen 1970f, 3) || ? Eg **ỉrb3** "rhinoceros" (Wb. I, 115); **rC3** can reflect a specific Egyptian spelling for ***Cl** or ***lC**, cf. **png3**, Coptic **ⲡⲱⲗϭ** "separate" vs. Arab **falağ** "separate in two" (Vycichl 1958, 374); as a cognate to Sem, Takács. p.c. prefers Eg (OK) **ỉb3w** "Barbary sheep; Ovis tragelaphus" (Wb. I, 62) - cf. Blažek 1999, 64)|| ? Berb ***Hiliw** "elephant" (Prasse 1974, 124-25) > Ayr **iləw**, Iulemidden **eləw** (Alojaly), Ahaggar **êlw** (Prasse) etc. || (W) Zenaga **ðçih**, **īçih** "elephant" (Nicolas) || ? Ch: (E) Mokilko **ʔêlbí** id. (Jg), besides Lele **bílá-hè** "donkey" (Weibegué & Palayer; cf. Orel & Stolbova 1995, 24, #90: Sem + Lele). Cf. MEl **lakpilan** "horse", maybe from ***laki-[i]pilan** where the first component corresponds to El **laki-** "to travel" (Blažek 1999, 64: Dr + Sem + El).

58. Dr ***civ(v)anki** "leopard, lynx, hyena" (D 2579: I, III)
AA ***ʒiʔb-** "wolf, jackal, hyena, lion" > Sem ***d̲iʔb-** > Akk **zību**, **zibū** "jackal, vulture", Hebr **zəʔeb̲** "wolf", Aram of Palmyre **dʔb**, Jewish Aram **dēb̲ā**, Syr **dī(ʔ)bā**, Arab **d̲iʔb** "wolf, jackal", Mehri **d̲iyá:b** (Nakano),

Jibbali **dīb**, Soqotri **dīb** "wolf", Geez **zəʔb & zəbʔ** "hyena", Tigray **zəbʔi** id., Amh **žəb** id. (Leslau 1987, 630; Cohen 1970f, 324); cf. also the Sabaic proper name **Mdʔb** (Biella 1982, 90) ||| Cu: (E) HECu ***dzoobba** "lion" > Kambatta **zoobba**, Hadiya **hoobba**, Sidamo **dobb-icco**, pl. **dobbe** (Hudson 1989, 92) = **doobba**, Tembaro **zobbé-ččo**, Alaba **zobe-ččo**, Qabenna **zoobbóo** id.; cf. also SOm parallels (perhaps borrowed from HECu): Baka **zab** id. (Leslau, *AuÜ* 63[1980], 120), Galila **zob(ba)**, Hamer **zɔbɔ**, Karo **zobo**, Dime **zop** (Bender) ||| Eg (Pyr) **z3b & zb** "jackal", besides **dyby-w** "wolves, jackals, hyenas" (Budge), cf. also **d-b** plus the ideogram "jackal" in the Coffin Texts (Vycichl 1958, 383) ||| Ch: ? (W) Ngizim **jíbdà** "civet cat" (Schuh) || (E) Migama **jábíyá** "hyena" (Jg), Bidiya **jèbèygẹ** id. (Alio & Jg). Orel & Stolbova 1995, #2660 also quote Beja (NCu) **diib** "wolf" (Reinisch) and Zayan of Ishqern (NBerb) **ɓenđibbun** "jackal" (Loubignac). Both the words are apparent borrowings from Arabic; in the latter case "son of **diʔb**".
Cf. IE ***stib$^{(h)}$-yo-** > Slavic ***stьbjь** "wild cat" > Church Slavonic **stьblь**, OPolish (1472) **step**, later **zdeb** & **zdbik**, today **żbik** (Blažek 1992, 20-21: Dr + Alt + Slavic).

59. Dr ***eruvay** "eagle, kite" (D 818: I)
AA ***ʕary/w-** "eagle" > Sem: Akk **erû(m)**, **arû** "eagle" (AHw 247, 72), Jewish Aram **ʕārā**, **ʕaryā** id. (Zimmern 1915, 51) ||| Cu: (N) Beja **ɛr'e** "eagle" (Roper) = **éer'e** "weissschwanzige Seeadler" (Reinisch) = **eeri** "hawk" (Hudson).
Cf. Kartv ***orb-** "eagle" > Georgian **orb-i**, Swan **werb** id. ||| IE ***H$_3$er-/*H$_3$or-** "eagle; bird" (Pokorny 1959, 325-26; Greppin in EIEC 173) and also Sum **hu-rí-in** "eagle".
Illič-Svityč, *Étimologija* 1965[67], 352: Sem + IE. Bomhard & Kerns 1995, #406 compare IE + Dr + Sum + Eg *Ḥr(w)* "the hawk-like god Horus" (Vycichl 1983, 307-08). But the Egyptian theonym perfectly agrees with Arab **ḥurr** in **ṭayr al-ḥurr** "falcon" (Zimmern 1915, 51 connected the Arab word with Akk **iṣṣur ḫuri** "Steinhuhn" - see AHw 390, lit. "Höhlenvogel", but the correspondence of laryngeals is not regular).

60. Dr ***ciṛ-** "sp. bird" (D 2582: VI)
AA ***ċir(VʕV-** (~ ***ʕVċVr-** ?) "bird" > ? Sem: Akk **iṣṣuru**, Ugar **ʕṣr** "bird" (but Arab **ʕuṣfūr** "kleiner Vogel", cf. Aistleitner 1965, 239; maybe a compound of ***ʕ-w-p** "to fly" > Hebr **ʕāp** id., **ʕōp** "bird", & ***ṣvr-**) ||| Cu: (E) Oromo of Wellega **ċirrii** "bird" (Gragg); HECu ***ċiiḍa** id. > Burji **ċiiḍḍaa**, Hadiya **ċii'icco** etc. (Hudson 1989, 27 admits a borrowing from Oromo) || (S) Iraqw **tsirʕi**, Burunge, Alagwa **ciraʕa**, Asa **širaʔa** "bird" (Ehret 1980, 226: ***ʕ^{ʲ}aaraʕ-**) ||| ? Om: (N) Kachama **ċera** id. (Bender) ||| Ch: (W) Hausa **tsiryaa** "parakeet" || (E) Kabalai **cẹrrə́**, Ndam **cádíny** "bird" (JgIb 1994, 23).
Note: The Dravidian word is alternatively compatible with Kartv ***sir-** "bird" (EWKS 301) and perhaps with Alt ***sa(i)rV** > Tk ***sar(y)** "sp. falcon" || Mong **sar** "bird of prey" || Korean ***sāi** "bird" (AED #995). With regard to Dr ***-ṛ-** one would expect Tk ***ŕ**. On the other hand, Illič-Svityč (1971, 152) assumed the development ***-rj-** / ***-jr-** > Dr ***-ṛ-**. The latter case agrees with the Alt reconstruction ***sairV**.

61. Dr ***peḷa** "pigeon, dove" (D 4420: I, III)
AA ***(m-)bul-** "dove" > ? Sem: Ar **bulbul**, pl. **balābil** "nightingale", **ballala** "coo (dove)"; the Gurage forms as Soddo, Gogot etc. **bullal**, Muher **bulle** "pigeon" and Amh **bullal**, **bəlul** "turtle-dove" can be of an Oromo origin (cf. Leslau 1979, 141) ||| Cu: (N) Beja **bélbel** "wild dove" (Reinisch 1895, 47: Beja + Arab + Oromo) || (E) Oromo **bulula** (Tutschek) = Macha **bulala** "dove" (LVC) ||| Berb: (N) Kabyle ***θamella/i*** "dove" (F.W. Newman), B. Iznacen ***θmálla*** "turtle-dove" (Destaing) ||| Ch: (W) ***bulV** > Hausa **bóólóo**, Angas, Chip **bul**, Ankwe **bƐl**, Sura **m̀bul**; Tangale **tambul** "turtle-dove", Bolewa **mboole** "dove" (Stol'bova 1987, 156) = **bole** (Kraft), Karekare ***ɓelə̀wì*** (Kraft) || (C) Tera **mboola** "dove" (Newman), Pidlimdi **mbòledi**; Hildi **mbułā**, Wamdiu **bùła** id. (Kraft) || (E) Gabri **bélu** id. (Lukas), Kwang **bəlōki** id. (Jg), ? Bidiya **bullè** "sp. bird" (Alio & Jg).
Greenberg 1963, 55, #24: Ch + Berb + Eg (OK) **mnw.t** "Taube" (Wb. II, 79) which could be borrowed (probably during the New Kingdom) into Nile Nubian: Mahas & Fadidja **min(n)** ē id. (cf. Reinisch 1911, 109). The Eg ornithonym is safely compatible with the NBauchi (WCh) forms as Warji **mùnwái**, Kariya **múúnú**

"bird" (Skinner) and maybe Bidiya (ECh) **mininiyo** "sp. bird" (Alio & Jg). The witness of both the external comparisons exclude the primary ***-l-*** in Eg. Similarly Eg **mn.t** "Schwalbe" (Wb. II, 68) continuing in Coptic **BHNI** id. (Vycichl 1983, 28) indicates the medial ***-n-*** and not ***-l-***.
Cf. IE ***b^{h}ol-*** "dove" > Osset Digor **bælon**, Iron **bælæw**, Zaza **baurā**; Lithuanian **balañdis** id. (Abaev I, 249).

62. Dr ***kor-*** "fowl" (D 2160: IV, V, VI)
AA ***kur-/*karw-*** "fowl, partridge" > Sem: Syr *ʔ***akkərāyā** "cock", Arab **karawān** "a kind of partridge" ||| Cu: (N) Beja **kaakarret** "hen" (Thelwall) || ? Berb: (S) Ahaggar **ékərt** "nestling, esp. of an ostrich" (Foucauld) ||| Ch: (W) Hausa **kurciya** "dove" (Skinner 1996, 154), Montol **kier** "hen" (Jg), Buli **kworr**, Zaar **kwà:r** "chicken" (JgIb 1994, 70) || (C) Gude **kurkwutà**, Nzangi **kurkuta**, Glavda **kàkura**, Lame **kòrókú** "dove" (Kraft); Mofu **kwerekwere** "duck" || (E) Kera **akorkoro** "duck", Dangla **kókirà**, Jegu **kókóré**, Mubi **kúrrí**, Migama **kúkkẹrà** "chicken" (JgIb 1994, 71). Cf. Militarev (1984 ms.: Sem + Ahaggar + Ch + Sum). An onomatopoetic origin is not excluded.
Cf. IE ***kerko-*** "cock" (Pokorny 1959, 568) and maybe Sum **kur-gi$_4$** "goose" > Akk**kurkū** id.; cf. also **kurukku** "duck" ? .

63. Dr ***tār-*** "duck" (D 3169: I)
AA ***dirw-*** "sp. bird (hen ?)" > Sem: Hebrew **d^{e}rōr**, OAram **drr** "sp. bird (swallow ?, dove ?), Arab **durrat** "parrot", ? Gurage of Maskat **dərri** "sp. bird" (Cohen 1970f, 319), if it is not borrowed from Hadiya **dire** id. (Leslau 1979, 218) ||| Cu: (N) Beja **andirhe & endirhe** "fowl" (Rp) || (C) Bilin **diruwa** "hen, chicken" (Reinisch), Kemant **dirwo, pl. diruk** "hen, cock, chicken" (Conti Rossini), Awngi **dúra** "hen" (Hetzron) etc.; Geez **dor(o)ho** "chicken, hen, rooster, cock, fowl", Tigre **derho**, Amh **doro** etc. id. (Leslau 1987, 142) can be of an Agaw origin || (E) Afar **dorrahe** "hens" (Parker & Hayward), Som **dooro** "chicken, hen" (Abraham), Jiddu **duurí** "chicken" (Banti & Ibraaw), Hadiya **dire** "sp. bird" (Leslau) ||| Om: (N) Chara**deera** "hen" (Cerulli) ||| Ch: (W) Hausa **durwaa** "quail" || (E) Sumray **dùrē** "chicken" (Jg) and / or Mokilko **déerè** (Jg), Kwang **dére** "dove" (Lukas).
Cf. Sum **dar** "partridge" (cf. Militarev 1984, 58: AA + Sum).

64. Dr ***cēv-*** "fowl" (D 2818: I, VII) and / or ***cuvv-*** "peacock" (D 2676: VII)
AA: Ch ***(n)ʒabun*** "guinea fowl" (Stolbova 1996, 43) > (W) Hausa **zàà́bóó**, Gwandara **jàbùwa**; Pa'a **jávuna**, Diri **ázàvúnà**; Jimi **zubben**, Zakshi **zubm**; Ngizim **záabànú**, Bade **sáávànyín** || (C) Tera **civàn**; Higi Kamale **zàvunạ**; Gude **zòvàna**, Gudu **zúvűn**; Laamang **zàvànàaká**; Glavda **žábàra**; Muktele **zàvúr**, Gisiga **tsuvoŋ**; Daba **zàvín**; Gidar **zavuna**; Logone **sàfàŋ**; Zime-Batna **cófnók** || ? (E) Migama **zóbíló**; Jegu **zóbóló** etc. (JgIb 1994, 174-75).

65. Dr ***māc-*** "python" (D 4793: I, V, VI)
AA ***mVS-*** "snake" > Cu: (E) ***maš-*** > Som **mas** "snake"; Oromo **mas-ka** "serpente boa con le corna" (Thiene); Sidamo **mašo** (Cerulli) & **hamaššo** (***hamas-čo**), Hadiya **hamašša**, Burji **hamasi** id., Kambatta **hamaasu** "roundworm" (Sasse, *AuÜ* 59[1975-76], 127; Id. 1982, 90-91; Hudson 1989, 137: HECu ***hamasa** which can represent a contamination of the forms corresponding to the Somali synonyms**mas & abeeso**) ||| Ch: (W) Hausa **meesàa** "python", Gwandara **meše**; Gera **mùsi**, Pero **mucì** id. (Kraft).
Cf. Sum **muš** "snake". Militarev 1984[ms.]: Sum + ECu + Ch + Sem: Jibbali **miss** "to bite (of snake).

66. Dr ***kapp-*** "frog" (D 1224: I-III, VI, VII?)
AA ***kub(b)-*** "toad" > Cu: (E) ***kub-*** > Harso, Gollango **hup-e**; Konso **kup-aata** id.; ? Burji **kóop-i** id., if it is not borrowed from Koyra (Sasse 1982, 117) ||| ? Om: (N) Koyra **koppe** id.
Cf. IE ***g^{w}ēb$^{(h)}$-*** "frog" (Pokorny 1959, 466).

67. Dr ***kār-*** "fish" (D 1476: I)
AA ***kary/w-*** "fish" > ? Sem: Aram (BabylTalm) **kwwr***ʔ*; Soqotri **kér** "sp. shark" (Naumkin) and / or**kúwerhor** "sp. fish" (Leslau) ||| Cu: ? (N) Beja **kware** in **ašoob kwaremnạ** "fisherman" (Hudson) || (E) Dasenech **káara**

"fish" (Haberland); Gollango **haare**, Harso-Dobase **xaariccé**, pl. **xáare** (AMS), Tsamakko **xáare** (Hayward) ||| Om (S) Hamer **kara** (Lydall), Banna **kaara** id. (Bender) ||| Ch: (W) Hausa **kíífíí**; Yiwom **k^{h}ìràp^{h}**; Kulere **kirif**; Bolewa **kɛɾwo**; Siri **kerfei**; Kir **cirəp** || (C) Tera **yurvù**; Nzangi **húrfẹ**; Sukur **k^{h}íráf**; Gisiga **kəlef**; Daba **kìlíf**; Gidar **kílfi**; Musgu **hílif**; Zime-Batna **kérfé** etc. "fish" (JgIb 1994, 140-41; Stolbova 1996, 62-63: Ch ***kirop-**).
Cf. Ural ***kŏrV** "sp. fish" (UEW 187) ||| Alt: Tk ***kōra** "trout" (Räsänen 1969, 282) || Tung ***koru**"pike" (TMS I, 404); cf. also Sum **kir**, **kiri$_{x}$** , **gir$_{14}$** "fish". Militarev 1984 [ms.]: Sem + ECu + Ch + Sum.

68. Dr ***malaṅku** "eel" (D 4737: I-III, VI)
AA ***mal(w)-** "fish" > Cu: (E) Som **mallay**, May **mallaallay**, Jiddu **malay** (Banti & Ibraaw), pBoni ***màlòlái** (Heine), Bayso **moole**; Mossiya **moole** "fish" (Lamberti & Sottile 1997, 461) ||| Om: (S) Ubamer **mol-ta**, Galila **mola** id. (Fleming) || (N) Wolayta **moliya**, Zala **muoliya**, Dawro **molya**, Gofa **mola/molo**, Malo, Kachama **molo**, Gamu, Dache, Zayse **mole**, Koyra **malala**, Chara **mula** etc. "fish" (Lamberti & Sottile 1997, 461) ||| Ch: (W) SBauchi: Mbaru **mwalaŋ**, Guruntum **mollaŋ** id. (Shimizu) ||| Eg (D XVIII) **mr.t** "ein Tier (zwischen Fischen genannt)" (Wb. II, 105; cf. Takács, *Lingua Posnaniensis* 39[1997], 93: Eg + EC + NO + Guruntum; following Cohen 1947, #466, he also quotes 'Sidamo' *múoliyā*, in reality 'West Sidomo', i.e. Omotic, concretely Zala after Cerulli) and, maybe, **mr** in the name **Nʕr-mr** (*Narmer*), the king of the 1st ("0th" ?) Dynasty, lit. "Catfish" ? (Takács, *Živa antika* 48[1998], 134; he mentions other names of the "0th" Dynasty as **K3** "Bull" or **Srq** "Scorpion"); or
AA ***mul(ʕ)-** "lizard" > Cu: (E) Afar **mulluʕit** (Reinisch); Som **mulaʕ**, **muluʕ**, Rendille **mulúḥ** id. (Heine 1978, 91) ||| Berb: (N) B. Menacer **mulab** id., Kabyle of Jurjura **imulab** "Algerian lizard" (R. Basset, *JA* 1885, 174) ||| Ch: (W) Hausa **mulwa** "a short thick snake" || (C) Kobochi **malwaa**, Nzangi **mālawá**, Holma **malwé** "chameleon" (Strümpell). Takács (*Studia etymologica Cracoviensia* 1[1996], 147) adds Eg (Greek) **mnḥ** in **k3-mnḥ** "Schildkröte" (Wb. V, 96) which represents an attractive cognate esp. of ECu ***mulʕ-**.
Cf. IE: Arm **mołêz** "lizard"; OSaxon, OHigh German **mol**, German **Molch** "salamander".

69. Dr ***mīn̲(u)** "fish" (D 4885: I-III, V, VI)
AA ***mVn-** "fish; lizard" > ? Sem: Akk **(u)mūnu** "Larve, Raupe" (AH 673), Syrian *ʔāmūnā* "sp. lizard" (Zimmern 1915, 52 assumed Akk > Syr) ||| Berb: (N) Sus **amun** "sp. fish" || (S) Iulemidden **emăn** (Alojaly), Adghaq **emən**, Taneslemt **əmən** "fish" (Prasse 1974, 145: pTuareg ***ī-manāhan**; Militarev 1991, 260: Berb + IE). The semantic difference is comparable with German **Raupe** vs. Slavic **ryba** "fish".
Cf. IE ***m^{e}ni-** "sp. fish" (Pokorny 1959, 731) ||| FU ***menV** "sp. fish" (FUV 99; SKES 347-48).

70. Dr ***irāma-** "sp. fish" (D 5166: I, III)
AA: Eg (OK) **rm** "fish", Demotic **rym** & **rm** id., Coptic ⲣⲁⲙⲉ "the fish Tilapia" (Wb. II, 416; Vycichl 1983, 172). Takács (*Živa antika* 48[1998], 139-40) connected Eg **rm** "fish" with AA ***rim-** "worm, ant, termit", but there is a more preferable cognate in Dr ***e̲rumpu** "ant" (see below).

71. Dr ***kuṇi /*kunni** "bee" (D 1867: I, II?)
AA: Cu: (E) ***kan(n)-/*kinn-** "bee" > Som **šinn-i**, Oromo of Wellega **kann-ii-sa** (Gragg), Borana, Waata, Orma **kinn-ii-sa** (Stroomer), Konso **xan-ta**, Dirayta **han-t(a)** id. (Sasse 1979, 24).
Bomhard (1984, 235, #143) connected it with IE ***kn̥Hko-** "honey-colored" > Germ ***xunaga-** "honey" in agreement with his system of correspondences. In the system formulated by Illič-Svityč, a regular correspondent of IE ***k** is AA ***ḳ**.

72. Dr ***tak**(Vn)- "bedbug" (D 2996: I, II)
AA ***tuk(an)-** "biting insect: bedbug, tick" > Sem: Jewish Aram **takk-** "moth", besides Geez **tək^{w}ān**, Tigre, Gurage **təkan**, Amh **təh^{w}an**, Harari **tuxān** "bedbug" (Leslau 1987, 573), although these forms can be borrowed from Agaw; does also belong here Arab **kuttān**, Mehri **kettōn** "bedbug" via metathesis ? ||| Cu: (C) Bilin, Khamir **təx^{w}ana** "bedbug", Qwara **tukan** "Wanze" (Reinisch), Kemant **təxona** ~ **təɣona** "bug" (Zelealem), Awngi **təɣ^{w}áná** id. (Hetzron) || (E) Saho **tukwán** "fleas" (Welmers), Afar **təkwaan** "Wanze" (Reinisch), Oromo

of Macha **tukani** "bedbug" (LVC), Borana **tukaani** id. (Stroomer), Qabenna **tuhaana** id. (Leslau) || Dahalo **t̲ákkwaʔe** "dung beetle" (Ehret) || (S) ? Iraqw **táḥân-mo** "bedbug" (Whiteley) ||| Eg (Pyr) **tkk.t** "Schlupfwespe (Ichneumonida)" (Wb. V, 336). Orel & Stolbova (1995, #2359) add NBauchi forms as Mburku, Siri **takwana**, Diri **takwan** "bleed" (Skinner).

73. Dr ***erumpu** "ant" (D 864: I) and / or ***elumpu** "white ant" (D 837: V, VI)
AA ***rim-** > Sem ***rimm-at-** > Akk **rimmatum** "Made" (AHw 986), Hebrew **rimmā**, Aram **rāmat-** "worms (in rotten meat, corpse)", Arab **rimmat** "winged ant" ||| Cu: (E) ***rim(m)-** (with the variant ***raam-**, probably representing the **a**-plural) > Saho **rimme**, **rimmi** "termite, worm, maggot in rotten meat / corpse" (Reinisch), Rendille **ririm**, Bayso **iririm**, Dasenech **'armaatti**, Oromo **rir(i)ma** "termite, white ant" (Thiene), Wellega **raammoo** "worm, parasite", **rimma** (Gragg), Macha **rirma**, **rimma** "termite" (LVC), Borana, Orma **rammoo** "worm" (Stroomer), Konso **irmatta**, Dirayta **irrimašš** "termite" (Black), Gollango **irmátte** "termite" (AMS), Burji **hírima**, Hadiya **irm-acco**, Sidamo **raamoo** "termite" (Sasse 1982, 97) ||| Ch: (E) Bidiya **ʔiríirimo** "insecte", **ʔirìirìŋ** "petit termite qui sort le jour" (Alio & Jg) - cf. Takács, *Živa antika* 48[1998], 139: Sem + ECu + Bidiya + Eg **rm** "fish".
AA ***lVm-** "termite, ant, worm" > Sem: Akk **lamattu** (***lamāntu**), Eblaite **la-ma-an** (***lamān**) "ant" (Sjöberg, *Welt des Orients* 37[1996], 24), besides Hebrew **nᵉmālā(h)**, Arab **naml** "ant" with metathesis of the 1st and 3rd radicals ||| Cu (E) Som **lulumo** "larvae of mosquito" (Abraham); ? Oromo of Borana **lime** "termite" (LVC) ||| Ch: (C) Ngwaxi, WMargi **lema**, Chibak **lɨmà**, Bura, Higi Kamale **lumà** "termite" (Kraft) || (E) Jegu **lólmó** "ant" (Jg).

74. Dr ***ko[tt]-** "black ant" (D 2096: I, III, IV?, V, VI?) and / or ***ket(t)-** "white ant" (D 1548: I, III, IV, VI)
AA ***gu[ṯ]-** "worm, termite" > Cu: (E) Som **goḍalol** or **godalol** "worm" (d'Arpino); HECu ***gooṭa** > Gedeo **ḳooṭamo**, Sidamo **gooṭaamo** "big ant", besides Burji **gandulayse** "black ant" which is connected with Oromo **gondaa** and Amh **gundan** (Hudson 1989, 20) ||| Om: (N) Wolayta **guṯṯuniya** "worm", Gamu **guṣune** id., Dache, Zayse **guṣume**, Malo **guṣine** id. (Lamberti & Sottile 1997, 380).

75. Dr ***por-** "winged insect, winged ant" (D 4568: VI)
AA: Cu: (N) Beja **biret** ~ **(e)mbiret** "white ant, termite" (Hudson) = **birát**, with the article **tembirát** "termites, white ants" (Roper) || (E) Som **aboor** "termites" (Abraham), Boni **aboor** id. (Heine) ||| ? Ch: (C) Fali Mucela **mùbuɽ̃(u)**, Gude **mubɨ̀rà** "termites" (Kraft).

D. Flora

76. Dr ***kā(n)** "forest" (D 1418: I-III)
AA ***ka[wi]n-** "forest, tree" > Cu: (C) Bilin, Qwara, Kemant **kana** (Appleyard), Awngi **kani** "tree" (Hetzron) || (E) Som **kayn**, pl. **kaymo** "thicket" (Abraham); ? Burji **kaan-** "bark of tree" (Sasse) || (S) Iraqw **kintu** "thicket" (Ehret 1980, 331) ||| ? Eg (Greek) **kwn.t** "Name eines heiligen Baumes" (Wb. V, 117) ||| Ch: (W) Angas **kŭŋ** "tree" (Foulkes); Kariya **kənán** id. (Skinner); Mangas **kiin**, Zul **kiini** "tree, wood" (Shimizu); Bade **kùnù** "forest" (Kraft) || (C) Musgu **kwaaná** "dom-palm" (Krause); Banana **kuná** (Lukas), Masa **guna** "tree, wood" (Kraft).

77. Dr ***tūr-** "bushes" (D 3401: I)
AA ***tarw-**/ ?***taw(i)r-** > Sem: ? Tigre **tor** "gable-beam in the roof" (Littmann & Höfner 1962, 307) ||| Cu: (E) Som **tiir** "post, pillar" (Luling) ||| Eg (med; Dyn XVIII) **twr** "sp. reed ?" and / or (NK) **twr.t** "Stock, Stab aus Holz" (Wb. V, 252) ||| Ch: (W) Hausa **taruwaa** "sp. tree" ||| Berb: (N) Aksimen **atru** "a kind of pole" (Orel & Stolbova 1995, ##2375, 2383).
Cf. IE ***derw-** "wood, tree" (Pokorny 1959, 214-17).

78. Dr ***kar-** "firewood" (D 1389: I, III-VI) or ***kor/r-** "firebrand" (D 2229: I, III, VI) or ***kur-** "piece of wood" (D 1842: I-III)
AA ***ḳar(w)-** "wood, tree" > Sem ***ḳār-** > Akk **ḳarītu** "Kornboden, Speicher", Hebrew **ḳōrā**, Aram, Syriac **ḳārīṯā** "beam", Arab **qarīyat** "stick" (Dolgopolsky 1983, 135) ||| Cu: (E) ***ḳor-** > Saho **or-** "to hew"; Som **qori**

"wood", Jiddu **qorów** "firewood" (Banti & Ibraaw), Boni **'óre**, Rendille **xóro** "(fire)wood" (Heine), Bayso **oro** "wood, forest" (Haberland & Lamberti 1988, 71); Arbore **ḳor** "tree" m., "wood" f. (Hayward), Dasenech **ɠor** id., Elmolo **ôr** "tree" (Heine); Oromo of Wellega **qor-aan** "firewood" (Gragg), Konso **qoyr-a**, Dirayta **ḳoyr** "tree, wood" (Sasse 1979, 48) || Dahalo **ḳoro** "tree" (Tosco).
Cf. IE ***kwr-es-(no-)** > Greek **πρῖνος** "hill oak"; Welsh **prenn**, Old Irish **crann** "tree"; Old English **hyrst** "bush" (Pokorny 1959, 633).

79. Dr ***mokk-** "piece of wood" (D 5109: I, III, VI)
AA: Cu: (E) ***muk-** "sp. tree" > Som **muk(o)i** "sycamore" (Cerulli), pBoni ***múkày** "tamarind" (Heine), Oromo of Wellega **muka** "tree, bush, woody" (Gragg) || (S) Burunge **muka** "chaff"; Asa **mogengera** "root" (Ehret 1980, 343, 324: SCu+Or).

80. Dr ***tump-** "Acacia arabica" (D 3335: III, IV, VI) and / or ***tump(Vr)-** "ebony tree" (D 3329: I, III, IV-VI)
AA ***damw-** "a big tree" > Sem: Arab **dawm** "wild palm-tree" (Steingass 380), cf. the proper names motivated by this tree-name in Thamudic **Dwmt** and Safaytic **Dm** (Müller 1962, 51-52); Mehri **dōm** "d.-tree" (Johnstone) = **dóum(et)** "Doompalme; Hyphaena thebaica" (Jahn); Tigray, Amh **dəma** "baobab; Adansonia digitata", Tigre **dəma** "bast of baobab" (Littmann & Höfner 1962, 514) ||| ? Cu: (E) Oromo of Wellega **dambii** "sp. tree" (Gragg) [Beja **doom** "dom-palm" < Arab **dawm**] ||| Berb: (S) Ahaggar ***tă-damam-ī*** "sp. palm" (after Militarev), while Zenaga (W) **ta-dəm-id**, pl. **təy-dumu** "baobab" (R.Basset) is borrowed from Arab **dawm** ||| Ch: (W) Karekare **dàmí**, Kirfi, Galabru etc. ***dàmà*** "tamarind" (Schuh); Kariya **dəmbur**, Mburku **dəmbər** etc. "baobab" - cf. Miya **düm** "tree" (Skinner); Ngizim **dəm** "wood", Bade **dəm-án** "tree, wood" (Kraft) || (C) Gisiga **dum** "high tree" (Lukas), Muturua **dum** "tree" (Strümpell).
Cf. FePerm ***tammo** (Illič-Svityč) = ***toma** "oak" (UEW 798) ||| Written Mong, Khalkha **dom** "lime-tree" (Dmitrieva 1972, 195).

81. Dr ***cāl-** "Acacia" (D 2474: I, III)
AA ***ŝul-/*ŝVlw-** "sp. tree (Acacia ?) > ? Sem: Aram **swl-** "ulmus" (Brockelmann) ||| ? Cu: (E) Oromo of Wellega **solooloo** "sp. tree" (Gragg) ||| ? Om: (N) Mocha **šolló** "sp. tree" (Leslau), Kachama **sola** id. (Conti Rossini) ||| Eg (Dyn XVIII) **š3** "tree" (Wb. IV, 400), Coptic **ϣⲁⲩ** "stem, bit, rest" (Vycichl 1983, 274) ||| Ch: (C) ? Kilba **šíl?bù**, Hildi **šilwù** "wood" (Kraft); Wandala ***ŝúulí*** "Ficus syzingifolio" (Lukas) || (E) Sokoro **sullē** "Acacia albida" and / or **súlē** "Acacia sieberiana" (Lukas).
Cf. IE ***salik-** "willow" (Pokorny 1959, 879) ||| FU ***śala-** "Ulmus" (UEW 458-59) ||| ? Alt: Mong **salaga** "Verzweigung, Arm des Flusses, Zwischenraum zwischen den Fingern, Tal" (Ramstedt 1935, 309), cf. Yakut **salā** "branch, vine, arm of the river", Shor **sala** "Ast, Zweig, Schossling" etc. < Mong ? (Räsänen 1969, 397).

82. Dr ***cup-** "tamarind" (D 2672: IV, V)
AA ***sapw-** "sp. tree" > Sem: Arab **safān** "a tree with thorns" ||| Cu: (E) Harso-Dobase **šaapakkoo** "sycamore; Ficus vesta" (AMS) ||| Berb: (N) Ntifa **a-suf**, Semlal **ta-säf-t**, Kabyle **ta-saf-t** "oak; Quercus ilex" ||| Ch: (W) Hausa ***šàafoo*** "sp. tree"; pBole ***šoofi** "wood" > Geruma ***šáfà*** (pl.), Ngamo **šòhò**, Bolewa **šòowí** etc. (Schuh). Cf. SISAJ III, 6: Arab + Berb + WCh.
Cf. FeVo ***šapa** "aspen" (UEW 783) ||| ? Alt: Tk ***syba** "Pinus" (Räsänen 1969, 414).

83. Dr ***tō[k]-** "Ficus" (D 3537: V, VI)
AA ***tiḳ-** "sp. tree" > Om: (N) Yemsa **te?a** "sycomore" (Cerulli) ||| Berb: (N) Warzazat **tiqqi**, Igliwa **tiqi** "juniper" (Laoust 1920, 490), Senhaja, Iznacen **t'aqqa** id. (Renisio), Zayan **t'aqa** "sorte d'arbuste épineux" (Loubignac), if **t-** is not the feminine prefix.

84. Dr ***alli** "water lily" (D 256: I-III)
AA ***lil-** "flower" > Cu: (E) Oromo **ililli** "flower" (Thiene; Borello; Gamta) ||| Berb: (S) Taitoq, Ghat **ilel** (Masqueray, Nehlil), Ahaggar ***êləl*** "laurier-rose" (Foucauld) < ***Hilil** (cf. Prasse 1974, 124) || (N) Shilh of

Tazerwalt **alîli** (Stumme), Iznacen **alili** (Renisio), Zayan **aḷiḷi** id. (Loubignac), Kabyle **ilili** id. (Dallet), Ayt Seghrushen **alillu** "flower" etc. (Laoust 1920, 472).
Cf. IE: Hittite **alel-**, dat.-loc. **alili** "flower, bloom", coll. **alalessar** "meadow", Greek λείριον & Latin **lilium** "lily" (see Blažek 1996, 22).

85. Dr ***koṛ-** "millet" (D 2163: I, III? V, VI)
AA ***gur-/*gir-** "millet, bean" > Sem: PostbiblHebrew **gērā** "grain of a carob", BiblHebrew " $^{1}/_{20}$ of a shekel", Aram **gērā** "Johannisbrotsame" > cf. Akk **girū** " $^{1}/_{24}$ part of *šiqlu* (unit of weight)" (AHw 291; Cohen 1970f, 177; Klein 1987, 108) ||| Ch: (W) Hausa **gééróó** "millet", Gwandara **gyoro** id.; Sura **gyewuro** id. (Kraft); Diri **agyura** id. (Skinner); Seya **gyoro** id. (Kraft) (Stolbova 1987, 219) || (C) Higi Futu **gərwa** "millet", Lamang **gəraŋ** id., Misme **gwirany** "sorghum" (Skinner 1996, 83) || (E) Sumray **giri** "Beans" (Friedrich) = **jírī** id. (Lukas), Dangla **gèrdyèŋ** id. (Frédry), Jegu **gír(k)**, Mubi **jìràagó** etc. id. (JgIb 1994, 11).
Cf. IE ***g^{h}eĝ^{h}ro-** "millet", ***ĝ^{h}er-/*g^{h}er-** "sp. corn or grass" (Pokorny 1959, 439-40, 445).
Cf. Sum **gur** "Getreidemass" (Zimmern 1915, 21; here he saw a source of Akk **kurru**, Hebr **kōr**, Aram **kōrā** > Arab **kurr** id.).

86. Dr ***ōl-** "palm leaf" (D 1070: I, II)
AA ***ʕalw-** "leaf, sprout" > Sem: ? Akk **alū** & **elū** "Tonröhre" (AHw 39: < Sum); Hebr **ʕāle** "leaf" (Klein 1987, 472), Syr **ʕelwā** "leaf, foliage" (Rabin 1975, 91; he also quotes Arab *ġalā* "to grow (plant)", *ʔaġlā* "to strip a vine of its leaves") ||| Cu: (E) Som **ʕaleen** "leaf" ||| ? Eg (OK) **ʕr** "Binse, als Schreibfeder", (Greek) **ʕr.t** "Stengel der Lotosblume" (Wb. I, 208), Coptic ⲁⲣⲉⲓⲟⲩⲉ "jonc, roseau de marais" (Vycichl 1983, 16) - cf. Calice 1936, 26, #14a: Akk+Hebr + Eg ||| Berb: (N) Ayt Ndhir, Zayan **ala** "leaves" (Laoust 1920, 471) || (W) Zenaga **āʒa^{h}** id. (Nicolas) || (S) Ahaggar **ela**, pl. **ilattän** "feuilles minuscules" < ***ē-laHaH /*ī-laHāt-an** (Prasse 1974, 76); cf. also Ahaggar **êl**, pl. **êlawän** & **êllän**, East Iulemidden **yel**, pl. **yellătăn** "herbe fraîche" < ***HiliH-(āwan)** & ***Hilil** (Prasse 1974, 129, 125) ||| Ch: (W) Pero **alȁw** "leaf" (Kraft); Jimbin **aluhu** id. (Skinner) || (C) Muffu **ēlḗ** "leaf" (Strümpell).
Cf. IE ***H$_2$/$_3$el-/*H$_2$/$_3$ol-**: Hittite **hahhal-** "Strauch, Busch" (***halhal-** ?), **hahlawant-** "green" (Tischler I, 123-24, 121); Latin **ulva** "Schilfgras, Seegras".

87. Dr ***āk-** "leaf" (D 335: I, III, V, VI) and ***ak(k)-** "to sprout" (D 15: I, II, VII) or ***ĕk-** "leaf" (D 775: IV, V)
AA ***[ḥ]ak/ḳ-** "part of a tree (leaf, branch, root)" > Cu: (C) Awngi **ekki** "grass" (Conti Rossini) || (E) Afar-Saho **hak** "branch" (Reinisch), Saho Irob *ḥak* id. (Hayward); Burji **haḳáa**, **háḳḳa** "tree, wood", Sidamo, Hadiya, Libido, Gedeo, Kambatta **haḳḳa** id. (Sasse 1982, 90; Hudson 1989, 158) || (S) Mbugu **ma-háko** "grass", **-háko** "green"; ? Burunge **hiqas-** "to cook leafy greens" (Ehret 1980, 306) ||| Om: (S) Ubamer **aqa**, Galila **(h)aqa**, **ahaqa**, Bako **(a)haka**, Dime **aax**, **aah** (Fleming) = **haaγo**, Banna **haaqa** etc. "tree" (Bender) || (N) Koyra **akka** id. (Cerulli) ||| Berb: Ahaggar **éké**, pl. **ikéwen** "root" (Foucauld), Ayr & Iulemidden **ekăy** id. (Alojaly), Adghaq **ekew** id. ||| ? Ch: (W) Hausa **haki** "grass", Pa'a **hyeƙa** "straw (stalks)" (Skinner 1996, 102). Cf. OEl **huk** "wood" (Blažek 1999, 65: AA + El)

88. Dr ***cappu** "leaf" (D 2673: I, II)
AA ***Sap-** "leaf" > ? Sem: Akk **šuppatu(m)** "Binse" (AHw 1280) ||| Cu: (E) Gedeo **šafa** "leaf" (Hudson), Hadiya, Qabenna **šäfi-ta** > Gurage of Soddo **šaafo** "round base made of leaves of the *äsät* and made for carrying loads and shoulders or head or used under a pot" (Leslau 1979, 572-73; he also quotes Oromo **šäfo**, but without any translation) ||| Ch: (W) Miya, Kariya **tlipi**, Mburku **tlipu** "leaf" (Skinner 1977, 28; he incorectly quoted 'Peve' **tlap** id. instead of correct Peve, the language from the Masa group recorded by Kraft 1981; Stolbova 1996, 98 follows this misprint, using Pero) || (C) ? Logone **tlivi** "herbe, paille" (Mouchet); Banana **łabȁnȁ**, Lame **łāb**, Peve **tlap**, Zime **tla'b** "leaf" (Kraft).
Cf. IE ***sop-** > OIcelandic **sef** "reed"; Church Slavonic **sopuxъ** id. (Mann 1984-87, 1247).

E. Inanimate nature / space / time

89. Dr ***aray** "stone, rock" (D 321:)
AA ***har-** > Sem ***harar-** "mountain" > Tell Amarna **ḫarri**, Ugar, Phoen **hr**, Hebr **har, hererī** id. (Cohen 1970f, 459) ||| Cu: (E) Yaaku **hƐƐrɔ'**, pl. **hƐrɔ́r** "big rock" (Heine) ||| Berb: (S) Ahaggar **ăhor**, pl. **ăhôrən** "amoncellement de rochers" (Prasse 1969, 65).
Cf. El (Achaemenid) **har** "stone" (Blažek 1999, 62: Dr + AA + El).

90. Dr ***pār-** "rock" (D 4121: I, II?)
AA ***pVhr/l-** "stone" > Sem: Arab **fihr** "stone of the size of a hand" (Steingass 807) ||| ?Om: (N) Kachama **palo** "stone" (Bender) ||| Ch: (W) Sura **kə-pƐ́r** "stone, gravel" (Jg), Mupun **peer** "stone" (Frayzingier) || (C) Hwona **fƐrə**; Higi Nkafa & Kamale **pùřƐ**, Higi Baza **pɨřƐ**, Fali Kiria **pɪ̰řɪ** etc.; Fali Mucela **fara(n)**, Gude **farà**, Mwulyen **fúrà** etc. id. (Kraft) || (E) Kera **pɔ́r-kî** "stone, rock, mountain" (Ebert), Bidiya **peera** "roche lisse" (Alio & Jg). Stolbova 1996, 20: pCh ***puHer-** + Arab.

91. Dr ***por(r)-** "mountain, summit" (D 4567: I, IV-VII) and / or ***pōr-** "hill" (D 4595: I, II)
AA: Cu: (E) ***buur-** "highlands, hill" > Som **buur** "mountain", Rendille **búr** "hill" (Galboran & Pillinger), Jiddu **burtí** "mountain" (Banti & Ibraaw).
Cf. Alt: Tung ***bur-** "island" and / or ***borï** "mountain" (TMS I, 111, 95).

92. Dr ***var-** "mountain" (D 5274: I, II) and / or ***vār-** "mountain slope, side" (D 5360: I)
AA ***waʕr-/*warʕ-** "forest, mountain" > Sem ***waʕr-** > Ugarya**ʕr** "forest", Punic **yr** "wood", Moabite pl. **yʕr-n** "parc", Hebr **yaʕar** "forest", Aram-Syr **yaʕ^{a}rā** "herbes non utiles, buissons, choses malheureuses", Arab (Yemen) **waʕra** "thicket", Geez **warʕ** "uneven (rough) terrain" (Leslau 1987, 603, 617; Cohen 1970f, 580) ||| Cu: (E) Dasenech **wɔr** "mountain" (Fleming) = **wáár** "stone" (Sasse); Tsamakko **woro** "forest" (< Ometo ?) ||| Om: (N) Wolayta, Zala, Gamu, Dache **wora** "forest" (Lamberti & Sottile 1997, 547-48: Ometo + Tsamakko + Bayso **oro** "wood, forest", but the latter form is derivable from ECu ***ḳor-**) ||| Ch: (W) Seya**wur** "mountain" (Kraft), Zaar **wuur** id. (Shimizu).
Cf. IE ***wer-** (?) > Persian **bar** "up, upon", Armenian **ger** id.; ***wers-/*wr̥s-** > **várṣman** "peak, top", **várṣīya-** "higher", **várṣiṣṭha-** "highest"; Old Irish **ferr** "better" (***werso-** "higher"); Lithuanian **viršùs**, Old Church Slavonic **vrъxъ** "top"; ***werk-/*wr̥k-** > Irish **feirc** "peak, bulge", Welsh **gwyrch** "top"; ? ***werks-/*wr̥ks-** > Old Indic **vr̥kṣá-** "tree" (lit. "top"), Gypsy **veš** "forest"; Avestan **varəšō** "tree", Persian **bīše** "forest, thicket", Kurdic **vèše** id.; (Mann 1984-87, 1516, 1519, 1601; Pokorny 1959, 1151-52) ||| FU ***wōre** "mountain, forest" & Ural ***wə̄rä** (FUV 126, 121-22; Illič-Svityč 1971, XIX, XX, XIV: Ural + Dr) ||| ? Alt: Tunguz ***borï** "mountain" (TMS I, 95), if it does not belong to Dr. ***por(r)-** "mountain, summit" studied above.

93. Dr ***kur-** "hilly country" (D 1844: I, II, III, VI) and / or ***kur-** "island" (D 1860: I, VI)
AA ***kur-** "hilly country" > Sem: Sabaic **kwr** "hill" (Beeston), Arab of Hadramawt **kawr** "mountain" (Müller 1962, 98), ? Arab **kūrat** "land, district" ||| Cu: (E) Saho **kooroo** "Berg, Gebirge" (Reinisch); Som **kur** "hill, mountain" (Abraham), Rendille **kúr** "hillock, small hill" (Galboran & Pillinger); Elmolo **kóran** "island" vs. **kóóran** "mountain" (Heine) ||| Ch: (C) Tera **kwárčáx** "hill" (Newman); Nzangi **kùròmo** "mountain", Glavda **ʔakwura** "stone", Zeghwana **kwirè** id., Gava, Nakatsa **kurà** id. (Kraft); Musgu **kiríi(d)**, **kriid** "stone" (Krause); Kuseri **kurr** id. (Lebeuf) || (E) Ndam **kŭrár** "mountain" (Benton).
Cf. IE ***g^{w}erH-** "mountain", in Balto-Slavic also "forest" (Pokorny 1959, 477-78) ||| Ural ***kurV** "thicket" (UEW 217) and / or FiPe ***kurV** "Hügel, Anhöhe, Landrücken" (UEW 677); cf. also FiPe ***korkV** "heightened place" (UEW 672); also Sum **kur, gur** "mountain, highlands, land".

94. Dr ***tēri** "sandhill, hillock" (D 3461: I)
AA ***dary-** "mountain" > ? Sem: Akk **midru** "eine Art Land" (AH 651); Post-BiblHebr **mƐdƐr** "clod of earth", Syr **medrā** "clod, soil"; Arab **madar** "clods of earth, mud"; Sabaic **mdr** "territory, ground"; Mehri **medēr** "sun-

dried brick"; Geez **mədr** "earth, ground, soil, field, country, land, territory, district, bottom of a pit" (Leslau 1987, 330), if the first syllable represents the prefix ***ma-/*mi-** of *nomina loci*; the original root √**d-r-w** can be preserved in the verb continuing in Jewish Aram **d^{c}rā** "élever, soutenir, emporter"; Harsusi **derō** "atteindre le sommet", **adrō** "grimper au sommet" (Cohen 1970f, 312) ||| Cu: (N) Beja **dar** "edge, bank of khor" (Hudson) || ? (E) Mussiye (SLLE) = Bussa (Bender) **tarra** "mountain" ||| Om: (N) Ometo ***dariya** "mountain" > Zala **darya**, Wolayta **deriya**, Gofa **dere**, Kachama **dare** etc. id., Gamu **dare** "country" (Lamberti & Sottile 1997, 348) ||| Berb: Ancient Libyan Δύρεν "Atlas mountains" || (E) Siwa **ədrār**, pl. **idrārən** (Laoust), Ghadames **adurar**, pl. **durāren** "mountain" (Lanfry) || (S) Ahaggar **adrar**, pl. **idraren** "mont, massif montagneux, chaine de montagnes" (Foucauld), Iulemidden **adar**, pl. **-en** "mountain" (Berg) || (N) Kabyle **adrar** "mountain" (Dallet), Shilha **adrar**, pl. **idraren**, Tamazight **dari**, pl. **tedwari** id. (Cid Kaoui) || Guanche **adara** "monte", **adaar** "cierta parte de costa peñascosa al Este de Tenerife; falaises escarpées; riveras escarpadas" (Woelfel 1965, 594-95) ||| ? Ch: (W) Ngamo **diri** "hill" (Meek).
Cf. Alt: Tk ***jār** "steep bank" (Räsänen 1969, 188) < Alt ***d-** || Mong **döre** "treppenähnliche Hügelabsatz" (Ramstedt 1935, 99 compared it with Ewenki **dörä** "Hügel").

95. Dr ***tipp-** "hill, mound" (D 3229: I-III, VII)
AA: Cu: (N,C,E) ***dab(b)-/*dib(b)-** "hill" > ? (N) Beja **dabba**, **debba**, **dibba** "loose dry soil; mound (of earth soil, sand); bank; moving sand hill(s)" (Roper), if it is not borrowed from Arabic (dial. of the Egyptian beduins) **debbah** "Sanddüne" or from Tigre **dabbat**, Tigray **dəbbat** "hill of sand" || (C) Bilin **dibba** "erhöhter Platz vor dem Dorfe", Qwara **deba**, Dembea **debba** "mountain" (Reinisch), Kemant **däba** "colline, petite plaine montante" (Conti Rossini) || (E) Afar **daàba** "brow of a hill" (Parker & Hayward); Som **dabo** "Hügel, kleiner Berg" (Reinisch).
Cf. Alt: Mong **dobu(n)** "hill" (Ramstedt 1935, 97) || ? Tk ***döbä** "hill, peak" (Räsänen 1969, 494) indicates Alt ***t-**.

96. Dr ***kū(v)i** "mountain" (D 2178: I, III, VI)
AA ***gab-/*gub-** "mountain" > Sem: Mehri **gōbi** "side of mountain", East Jibbali **gḗ** id. (Johnstone) ||| Cu: (N) Beja **gwob** "heap of stones in the bed of a khor" (Hudson) = **gwãb** "broad open flat ground with little or no vegetation" (Roper) = **ng^{w}aab** "flache, steinige Ebene" (Hess) || (E) ***gub(b)-** > Afar **gubb-i** "high spot in undulating country"; Dasenech **gum** "mountains"; Oromo **gubb-aa** "up, above"; Dullay: Tsamakko **g'up-o** (Hayward), Harso **gúp-o** "mountain"; Burji **gúbb-a** "highland" (Sasse 1982, 85) || Dahalo **gúβa** "plains" (Ehret 1980, 238) ||| Eg (Pyr) **Gbb** "Erdgott; Erde, Erdboden" (Wb. V, 164) ||| Ch: (C) Gava **γuɓà**, Nakatsa **γùba** "mountain" (Kraft).
Note: The semantic difference "mountain" vs. "plain" is not unusual, cf. Bulgarian **planina** "mountains" vs. the original meaning preserved in Czech **planina** "plain".

97. Dr ***mēruvay** "pyramid, high top" (D 5094: I, II, III)
AA: Eg (OK) **mr** "pyramid" (Wb. II, 94). Vycichl, *Muséon* 71[1958], 149-52 compared it with the metathesized Semitic words as Arab **raym** "Haufen, (Treppen)stufe, Anhöhe, Hügel, Grabhügel, Grab", **rīm** "Grabhügel, Grab", Hebrew **rōm** & **rūm** "Höhe, Hochmut", **rāmā** "Anhöhe" - all from √**r-w-m**, cf. Klein 1987, 611 ||| Berb: (N) Kabyle ***θ*emeri** "isolated rock, crag ?" (Newman 1887).
Cf. Ural ***mɤrV** "mit Sträuchern (wald)bewachsener Hügel, Bergrücken" (UEW 291-92) and / or ***mortV** "Ende, Rand, Ufer" (UEW 280-81).

98. Dr ***cilli** "hole" (D 2575: I, III) and / or ***calim-** "pit, hole" (D 2367: I-III, VI)
AA ***čal-/*čil-** "hole, cave" > Sem: Akk **šīlu(m)** & **šēlu** "Vertiefung" (AHw 1237; cf. p. 1152 **šalū(m)** & **salû** "eintauchen"); with another third radical cf. Arab **ṯalam** "breaking of a river bank", **ṯulmat** "gap, split, cleft" (Steingass 208) ||| Cu: (E) ***sill-/*sull-** > Oromo of Wellega **fulla'a** "to pierce through, break through" (Gragg), Konso **silla** "small hole" (Black) - see Sasse, *AuÜ* 58[1974-75], 245 || (S) Qwadza **silimbayo** "cave" (Ehret 1980, 326: Konso+Qwadza) ||| Berb: (N) Kabyle **tasilya** "fossé; caniveau" (Dallet) .

99. Dr ***kolli** "valley, bay, gulf" (D 2137: I, II)
AA ***gul-** "river" > Cu: (E) Afar **golo** "valley" (Parker & Hayward); Som **gol** "foot of hill"; Oromo **gol-a** "corner, edge, gorge", EOromo **gol-uu** "valley"; Gollango-Gawwada **kol-l-e** "river", Tsamakko **gol-e** id.; Burji **gól-oo** "slope" (Sasse 1982, 83) ||| Ch: (W) Hausa **gulbi** "river" || (C) Wadi **goolo** "Bach, Fluss" (Strümpell); Mbara **goloŋay** "marigot" (Tourneux et al.) ||| Berb: (S) Ahaggar **aǧəlmam**, pl. **iǧəlmāmen** "réservoir d'eau naturel", Ayr **égəlmam** "id., lac, mare", Ghat **aǧelmam** "lac"|| (N) Beni Snus **gelmam** "petit lac", Senhaja **agelmam** "lac" etc. (Kossmann 1999, 158, #406), Kabyle **agulmīm**, pl. **igulmiam** "lake" (Newman 1887, 29 connected it with Kabyle **gell** "to be stagnant").
Cf. FU ***kolV** "hollow, hole; crack, rift" (UEW 174) ||| ? IE: Celt ***glendo-** "edge, valley" > OIrish **glenn** "valley", Welsh **glyn** id., if **g-** is from ***g**^{wh}-. Cf. Bomhard & Kerns 1995, #349: Dr + ECu + FU + Celt + Kartv ***γele-** "ravine, river".

100. Dr ***pun-** "water, stream, river" (D 4338: I)
AA ***[f]awan-** "waterfall; rain" > Cu: (E) Sidamo **fo^{w}ónčo** "waterfall", Kambatta **foofančú**, Qabenna, Alaba **faaná** id., cf. also Gurage: Muher, Maskat, Wolane **f^{w}an**, Gogot **f^{w}anat** id. (Leslau 1979, 233) ||| Om: (N) Mocha **poɛno** "waterfall" (Leslau 1959, 45) ||| Ch: (W) ***fawan** "rain" > Sura, Angas, Ankwe **fwan**, Gerka **fien** id. (Jg); Kiir **fwân**, Zul **fwànè**, Zaar **vwàn** etc. id. (Shimizu) - see Stolbova 1987, 160).

101. Dr ***vār-** "to flow" (D 5356: I, VI)
AA ***war-** "river, lake" > Cu: (N) Beja ***wer** reconstructed after the record **oh-wer** "Fluss" of Krockow || (C) Bilin **wäräba** "river", Khamir **wirba** id. (Reinisch), Khamta **wirva** id. (Conti Rossini) || (E) ***war-** (Sasse 1979, 42) > Som **war** "pool, pond", Rendille **wor** "well" (Galboran & Pillinger) or "river" (Fleming); Dasenech **war** "river" (Sasse) = **wár** "river (the Omo)" (Tosco); Burji **wara** "marsh, swamp" (Hudson) ||| Om: (N) Male **uor** "river" (da Trento) ||| Eg (Pyr) **wrw** "Teich" (Wb. I, 332) ||| Ch: (W) Hausa **wuriya** "stream"; Miya **wər** "lake" (Kraft).

102. Dr ***kāl** "air, window" (D 1481: I) and ***kāḷi** "wind, air" (D 1499: I-IV, VI), cf. also Kurukh **ēxā-galī** "rainy season" (D 876)
AA ***kal-/*kul-** > Ch: (C) Mafa **kwòlaɾ̃** "wind" (Kraft) || (E) Sokoro **gále** (Friedrich), Gabri **kal**, Nancere **kāle**, Dormo **kál** id. (Lukas), Kwang **ká:l**, Kabalai **kàlə**, Lele **kàlō**, Sumray **gàlē**, Ndam**gā:l**, Tumak **gà:l** "wind" (JgIb 1994, 80-81) ||| ? Eg (Pyr) **ṯ3w** "Luft, Wind, Hauch, Atem" (Wb. V, 350), Coptic **THY** "wind" (Vycichl 1983, 223).
Cf. Alt: Tk ***kal-** "air, heaven" (Räsänen 1969, 226 compared it with Mong ***g**al**g**an** "clear sky").

103. Dr ***ēk-** "cool" (D 741, 742: VII)
AA ***(y)ak/ḳ-** "cold" > Cu: (C) Bilin **eγaγa** "hail, ice, snow", Qwara **yeγaγa** "hail, snow", Awngi **eγaγa** id. (Reinisch), besides Awngi **oqumi** "cold" (Lamberti) = *ąγúmi* id. (Beke) ? ||| Om: (N) Shinasha **aḳḳá**, Kafa & Mocha **aḳḳo** (Lamberti), Anfillo **aḳo** "cold" (Bender) ||| ? Ch: (W) Zaar **yàkŋ** || (C) Glavda **áákwhyà** "cold" (JgIb 1994, 79).
Cf. IE ***yeg-** "ice" (Pokorny 1959, 503). Dolgopolsky, *Étimologija* 1964[65], 263: Qwara + IE.

104. Dr ***cim-** "cold, chill, moistness" (D 2539: I-III, VI, VII?)
AA ***s-m-ṭ-** "to be cold" > Berb: (S) Ahaggar **ésamiḍ**, Iulemidden, Ghat **sammiḍ** || (W) Zenaga **šəmmōd** || (N) Wargla **asəmmaḍ**, Zayan **asəmmiḍ** etc. "cold" (Militarev 1991, 254-55) || (E) Ghadames**semməḍ** "être froid" (Lanfry), Siwa **asemmaṭ** "froid" n. (R. Basset < Bricchetti-Robecchi) ||| Ch: (W) Pa'a **sənḍí**, Tsagu **šiḍan**, Diri **súmbùḍù**; Polci **šimtu**, Zaar of Gambar **šimda** "cold" || (C) Gisiga **himeḍ**; Gidar **semiá**; Logone **sómááḍə**; Masa **símẹ**, Zime-Batna **símbèḍè** "wind" || (E) Kera **sãye** "cool"; Tumak **had** "cold" etc. (JgIb 1994, 78-81).
Cf. Kartv ***ŝim-** "water, wet" (EWKS 317) ?.

105. Dr ***viṇ-** "sky, heaven" (D 5396: I, II, VII) and / or ***vēnt-** "God", cf. also Kui **vēnu** "God, spirit" (D 5530: V, VI?)
AA ***wan(y)-** "light, day" > ? Sem: Gurage: Gyeto **wa?ana**, Muher **wanna** "day (in daylight)" (Leslau 1979, 640) ||| Cu: (N) Beja **wána** adv. "at dawn, early morning" (Roper) ||| Om: (N) Yemsa **wona** "day, daylight, light", Wolayta "morning", **woonto** "tomorrow", Gofa **wonta** "morning, tomorrow", Gamu **woonta** "morning" etc. (Lamberti & Sottile 1997, 546), Koyra **wont-** "to dawn, become light" (Hayward), cf. also Kachama **wanto** (Lamberti), Koyra **wonto**, Zayse **wonto** "god", also borrowed in Burji **wont-óo** id. (Sasse 1982, 190) ||| Ch: (W) Hausa **wuni** "daytime"; Tangale **wuni** "day of 24 hours; to spend the night"; Ngizim **wəna** id. (Skinner 1996, 292) || (C) Musugeu **wāŋ** "day" (Mouchet) ||| ? Eg (Greek) **wny, wyn** "Licht" (Wb. I, 315), Coptic **ⲟⲩⲟⲉⲓⲛ** id. (Vycichl 1983, 231; he derived these forms from **wn** "to open", cf. the syntagms **wn šsp** "répandre la lumière", lit. "ouvrir la lumière", **wn ḥr** "voir, faire voir, se montrer", lit. "ouvrir la face").

106. Dr ***ic-** "fire" (D 428: IV, VI)
AA ***?is-** > Sem ***?išš-(at-)** "fire" > Akk **išātu**; Ugar **ỉšt**, Phoen **?š**, Hebr **?eš**, OAram **?š**, BiblAram **?eššā**, Yudeo-Aram **?iššāṯā**, Syr **?ešāṯā**, Geez **?əsāt**, Tigre **?əsat**, Harari **isāt** etc. (Leslau 1987, 44; on the basis of Arab **?anisat** "l'élement familier du foyer", Cohen 1970f, 35-36 proposed the skeleton √**?-n-š**) ||| ? Ch: (W): SBauchi: Guruntum **?iši** id. (JgIb 1994, 138), Mbaaru **iší** id. (Shimizu). Karekare **yèsí**, Ngamo **yàsì**, Bolewa **òsí** "fire" continue proto-Bolewa ***wasi** (Schuh 1984, 208), cf. also Montol **?us**, Sura **wus** etc.; Kulere **wúš**; Gerumai **ušši**, Kirfi **wùší** etc. (JgIb ibid.). Perhaps the apophonic pair ***?is-/*?us-**?
Cf. FU ***äsV-** "heizen; sehr heiss, sehr warm sein" (UEW 27) ||| Alt: Tk: Turkish **yšy-** "funkeln, leuchten", **yšyk** "hell" etc. || Mong **isu** "Russ", Kalmyk **iš** "(Kien)russ" (Räsänen 1969, 167).
Illič-Svityč 1971, 262-63, # 127: Sem + WCh + Tk.

107. Dr ***pu[v]-** "spark" (D 4347: I, VI)
AA ***piʕw-** "fire" > Eg (Book of Dieds) **pʕw** "Feuer, Glut" (Wb. I, 503) ||| Berb: (E) Ghadames **ufa** "fire" || (N) Izdeg **afa**, Nefusa **tə-faw-t** id. || (S) Ayr, Iullemiden **efew**, Adghaq **efiw**, Taneslemt **ə-fiw** id. Militarev (1991, 259) connected these forms with the apparent cognates designating "light, sun": (S) Ghat**a-fa** "light", Ahaggar **tu-fa-t** "morning", Iulemidden **t-fi-t** "sun"; (N) Zayan **ṯi-fu-t** "dawn"||| ? Ch: (C) Gidar **affa** (Mouchet), Musgu **àfú** (Tourneux), Logone **fù ~ ffù** "fire" (Lukas).
Following his older study (1964) and the comparisons of Illič-Svityč (1966, 1968), Dolgopolsky (1995) compared it with Kartv ***-px-** "warm (of weather)" ||| IE ***peH$_{2/3}$-w$_{o}^{r}$/-wen-** "fire" (Pokorny 1959, 828) ||| FU ***päjwä** "day, sun, lightning / thunder, fire" (UEW 359-60) ||| Alt ***p/p'ewi**> pMong ***feɣü** > MMong **he?ü-šiye-** "ne pas supporter le climat", Kalmyk **ē-** "to warm, to dry in the sun or by fire; to bake" etc. (Starostin 1991, 240, 277) || MKor **sàị-pàị** "dawn", lit. "new day" (AED #696) || OJapanese **pi** "sun, day" (Starostin 1991, 113).

108. Dr ***ak-/*avk-** "to warm by the fire / in the sun" (D 18: VII)
AA ***?ak^{w}[y]-** "fire" > ? Cu: (E) Arbore **?eeg** (Hayward), Elmolo **éek** "fire" (Heine), Dasenech **?ege** "ashes" (Sasse); Yaaku **íkú** "fire" (Heine) || Dahalo **?éége** id. (Tosco) || (S) Asa **yogot** id. (Ehret) ||| Berb: (N) Tamazight **takat** "fire" (Cid Kaoui), Shilha of Tazerwalt **täk(k)ät** "Feuer(stelle)" (Stumme), cf. (S) Ayr, Iulemidden **ə̲kwəy** "griller, brûller" (Alojaly), Ahaggar **ekwi** "griller" (Foucauld) ||| Ch: (W) Jimbin **akwá**; Bade **ákà** "fire" || (C) Chibak **ù?ú**; Lamang **ùuvù**; Gisiga **?avo**; Musgoy **kū**; Buduma **au**; Masa **ku** id. || (E) Sokoro **óko**; Dangla **ako**; Mokilko **?ùwwó**; Birgit **?àkù** etc. id. (JgIb 1994, 138-39; Stolbova 1996, 81 reconstructs pCh ***?akuw-** and compares it with Sem/Arab √**ʕ-k-k** "to be hot").
Cf. IE ***aug-** "light" (Mann 1984-87, 41).

109. Dr ***po̲rutu** "time" (D 4559: I-VI)
AA ***bar(y)-** "time" > Sem: Soqotri **bér**, Mehri **bƐr**, **bər**, Śheri **ber** "already, just" (Johnstone); cf. Hebr, Aram **kə̲bār** id. (Leslau 1938, 97; Dolgopolsky 1966, 57: Sem + ECu) ||| Cu: (E) ***bar(r)-** "time, age, year" (Sasse

1982, 35) > Saho **bar-** "old"; Som **ber-i** "time"; Elmolo **parr-ac** "daytime"; Oromo **bar-a** "time, year, age", Konso **par-a** "year, age"; Harso-Dobase **par-ko**, Gollango-Gawwada **per-ko** "year", Gollango **pár-a**, Dobase **par-anka**, Tsamakko **bar-an(ka)** "when" (AMS); Sidamo **barr-a** "day, time", Hadiya **ball-a** "day, date", Gedeo **bar-o** "time", Kambatta **bar-i** "date", Burji **bar-i** (Hudson) = **bér-i** (Sasse) "year".
Cf. Ural ***purkV** "time" (UEW 407).

110. Dr ***aṇ** "upper part, above" (D 110: I, II)
AA ***[h]an-** > Sem: Akk **an(a)** "to, on" (AHw 47), Eblaite *ʔ***a-(NI)-na** "to" (Krebernik, *Quaderni di semitistica* 18[1992], 102) ||| Cu: (E) Harso-Dobase **ana** "auf" (AMS); HECu ***hana** "over, above" (Hudson 1989, 109) ||| Eg (Greek) **hn, hnn** "head" (Wb. II, 492).
Cf. IE ***an-** (*H_4- ?) "on, after" (Pokorny 1959, 39) and also Sum **an** "heaven; high, up" (see Blažek 1999, 57: Akk + HECu + Dr + Sum).

F. Culture

111. Dr ***vaṛi** "way, road" (D 5297: I, II)
AA ***war-** "way, road" > Cu: (E) ||| Om: (N) Kafa **woreto** "road" (Habte Mikael), Mocha **worato** id. (Leslau), Shinasha **weera** id. (Bender) = **werhá** "Pfad, Strasse, Weg" (Lamberti) ||| Eg (Pyr) **w3.t** "Weg, Strasse; Seite" (Wb. I, 246), Copt Bohairic **ouoi** "côté, direction" (Vycichl 1983, 231; he proposes a natural derivation from Eg (MK) **w3y** "kommen") ||| Ch: ? (W) Ankwe **war** "path" (cf. Greenberg 1963, 61) || (C) Dari **wari** "Weg" (Strümpell), Peve, Zime **vari** "road" (Kraft). Müller 1975, 66, #37: Kafa + Eg.

112. Dr ***āṛu-** "way, road" (D 405: I)
AA ***ʔarḫ-/*ʔurḫ-** "way, path" > Sem: Akk **urḫu(m)** "Weg, Pfad, Bahn" (AHw 1429); Hebr poet. *ʔ***ōraḥ** "path; way (of life, etc.)", Syr **urḥā** "road", OSArab *ʔ***rḫ** "road" (Biella 1982, 26), cf. Geez **marḥa** ~ **marḫa** ? "to show the way" ||| Cu: (E) Afar **araaḥ** "road" (Reinisch), Saho **araḥ** id. (Welmers); ? Bayso **raa** id. (Hayward); Gedeo **ora** id. (Hudson) ||| Ch: (W) Angas **ār** "road, path" (Foulkes), Chip **yar** "road" (Kraft), Sura **ár** "Weg" (Jg); Kulere *ʔ***aṛáw** "Weg; Lohn" (Jg) || (E) Mokilko *ʔ***ûrzí** "Weg" (Lukas); Bidiya *ʔ***óorà** id. (Alio & Jg); Kajakse **ìrí** id. (Dornoobs). Greenberg (1963, 61, #59) connected the Angas form with Ankwe **war** (plus Eg **w3.t** - see the preceding entry) and with (C) Gidar **úṛa**, but its meaning is "brousse" (Mouchet 1950, 16); it is apparently Greenberg's mistake because only the following entry is "chemin".
Cf. FeMd ***ura** "way, path" (UEW 804) ||| Alt: Tk ***oram** "street" || or < Mong **oram** "trail" (Räsänen 1969, 364).

113. Dr ***teru-** "street, road" (D 3422: I-III) and / or ***tāri** "road, way" (D 3170: I-III)
AA ***dar[ ]-** "road, way" > Sem ***darb-** > Syr **darbā** "route"; Arab **darb** "porte, défilé, rue, chemin", Jibbali **derb** "rue de village, cour" (Cohen 1970f, 307), Mehri **darb** "village street" (Johnstone), besides Arab **darar** "tracé, ligne d'une route, direction en face de la maison, point d'où souffle le vent" (ibid. 319) ||| ? Cu: (E) Yaaku **daar** "road" (Heine) ||| Ch: (W) Maha **dore** "path" (Newman), Karekare **ndàrù** "road"; Miya **dɛrhɨ̃** id. (Kraft) = **darhi** "road, path, way", Jimbin **dāru**, Mburku **dēri**, Kariya **derahi** id. (Skinner) - see Stolbova 1987, 172.

114. Dr ***pur-** "house" (D 4294: I, II)
AA ***bir-/*bur-** "fort, fortress" > Sem: Akk **birtu(m)** "Festung, Burg" (AHw 129) > Hebr **bīrā** "château, ville forte", Emperator Aram **byrt***ʔ*, Yudeo-Aram **bīrtā** "forteresse, temple" (Cohen 1970f, 63) ||| Ch: (W) Pa'a **mbura**, Siri **bəri** "place" (Skinner); Buli **ɨbə̀ri** id. (Kraft); Fyer **bor**, pl. **bwar** "Zuhause, Heim" (Jg) || (C) Bachama **vùrà-to** "town", Gudu **vúrá:-tsü**, Nzangi **vɨ́rà-ci**, Gude **vɨ́ran** id. (Kraft).

115. Dr ***uṛi** "place" (D 684: I) and ***ūr** "village, town; house" (D 752: I-IV, VIII)
AA ***war-/*wur-** "kin, family, house, village, city, place" > Cu: (E) Arbore **warí** "household" (Hayward); Oromo of Wellega **warra** "family, kin" (Gragg) ||| Ch: (W) Hausa **wúríí** "place" (Skinner 1996, 93); Daffo-Butura **wúúṛ** "Gehöft, Haus, Heimstatt, Zuhause", Bokkos **wur** "Haus" (Jg) || (C) Gabin **wûre**, Ga'anda **wîra**

"town", Hwona **wùrè** "compound" (Kraft); Makeri **wɔrɔ** "village" (Lebeuf) || (E) Dangla **wére** (Fédry), Migama **wèré** "place" (Jg), Sumray **wóram** "kin, family" (Lukas) ||| ? Eg (OK) **w** (if from ***w3** after Takács, p.c.) "district, region" (Wb. I: 243) and / or (Pyr) **i̯3.t** (< ***i̯u3.t** < ***i̯urt**.. < ***wurt**..?) "place" (Wb. I, 26). Cf. Blažek 1999, 57: AA + Dr + Elamite **murut/murun** "earth" + Sum **uru**.
Cf. IE ***wer-** > Av **vāra-** "Deckung, Wehr", Pahlavi **wl /war/** "shelter, enclosure", Persian **bār** "Wall, Fundament, Burg" (Iranian > Hungarian **vár** "Festung, Burg"); OEnglish **weorð** "Hof, Wirtschaft" etc. (Pokorny 1959, 1161-62) ||| FU ***werV** "place" (UEW 569) ||| Alt: Tk-Mong ***orun** "place" (Räsänen 1969, 365); also Sum **uru** "city".

116. Dr ***aṟay** "room, house" (D 322: I-III, VI)
AA ***ʕayr-/*ʕary-** "city, house" > Sem: Eblaite **ì-rí-a-tum /ʕīr-īy-at-um/** "suburb" (Fronzaroli, *Quaderni di semitistica* 13[1984], 143); Ugar **ʕr**, Hebr **ʕīr** "city", OSArab **ʕr** "castle" (Aistleitner 1965, 241) ||| Cu: (E) Afar **ʕàri** "house, tent" (Parker & Hayward), Saho **ʕáre** "house" (Welmers) = **ʕarii** "family, house, kin" (Reinisch) ||| Om: (S) Ubamer **ɛri** "house" (Fleming) ||| ? Eg (MK) **ʕ.t** (if from ***ʕ3.t** after Takács, p.c.) "chamber", (late) **ʕ** (***ʕ3** ?) "house" (Wb. I, 160) . Cf. Blažek 1999, 57: Dr + AA + Sum **éri** "city".

117. Dr ***mēṟ-** "plough" (D 5907: I, III, VI) and / or Dr ***maṟ-** "axe" (D 4749: I, II, III, V, VI, VII)
AA ***mar-** "hoe, plough" > Sem: Akk **marru(m)** "Schaufel, Spaten" (AHw 612) > Aram **marrā**, Arab **marr** "iron shovel"; ? Gurage of Selti **mirämärä** "to plough a field for the third time", Amh **märämmärä** "to dig" (Leslau 1979, 422), besides Tigre **məran** "strap for the plough", Tigray **maränä**, Amh **märänä** "die Ochsen an den Pflug spannen" (Littmann & Höfner 1962, 114) ||| ? Cu: (E) Hadiya **morâra** "Haken des Pfluges" (Plazikowsky-Brauner) ||| Eg (old) **mr** "hölzerne Hacke" [sign] (Wb. II, 98) ||| Ch: (W) Angas **mār** "to farm; a farm" (Foulkes), Chip **már** "field", Montol **mái** id. (Jg); Bole-Tangale ***mara** > Galambu **màrá** "farm" n., Dera **mərà** "farming" etc. (Schuh) || (C) Mboku **mẹr** "cultiver" (Mouchet); besides Mbara **mà:ràmáy** "sickle", Vulum **má:răm** id. (Tourneux), maybe Kuseri **mǫrəyǫ** "knife" (Lebeuf), Gulfei **mír** id. (Roeder) || (E) Sibine **mìr-î** "houe" (Jg).
Cf. Sum **mar** "shovel, spade; mattock, hoe" (see Blažek & Boisson 1992, 19-21: Dr + AA + Sum, with other [areal] parallels in IE & Sino-Tibetan).

118. Dr ***cāk-** "to sow" (D 2431: VII)
AA ***suk-** "to sow" > Cu: (E) Gedeo **soḳ-** "to sow, mill" (Lamberti 1993, 374-75 explains the emphatic **-ḳ-** from ***-k-** + the benefactive marker ***-ʔ-**) ||| Om: (N) Shinasha**šookà** "seed" n. (Lamberti), Kafa **šok-** (Cerulli), Mocha **šò:kki(yé)** "to seed" (Leslau) ||| Eg (Pyr) **sṯy** "to sow", Copt **site** id. (Wb. IV, 346; Vycichl 1983, 198) ||| Ch: (W) Hausa **shuuka** "to place seed in ground and cover with soil" (Skinner 1996, 246) || (C) Mbara **čok** "semer", Vulum **súkí** "faire le trou avant de semer" (Tourneux et al.). See Blažek & Boisson 1992, 26: Dr + AA. Skinner 1996, 246: Hausa + IE (Latin & Celtic) ***seg-** "to sow" (Pokorny 1959, 887).

119. Dr ***y[ā]ṟ-** "honeycomb" (D 518: I, II, VI)
AA: Sem ***ʕ-w-r**: Hebr **yaʕar** "honeycomb" (Klein 1986, 261; his Geez **⁺waʕar** does not exist!) and maybe Geez **maʕar / maʕār** "honey(comb)" (Leslau 1987, 326) or Arab **ʔary** "honey" (Cohen 1970f, 33) and / or **rāhiyyat** "bee" ||| Cu: (E) Dasenech **aar** "honey" (Haberland) ||| Berb: Iulemidden **táraut** "honey" (Barth).

120. Dr ***cup-** "salt", ***cuvar** "salty" (D 2201: I-VI)
AA ***ʕaCub-** "salt" > Cu: (C) Bilin, Kemant **šəwa**, Khamir **čəwa**, Awngi **číwí** "salt" (Appleyard 1984, 47: ***č-**) || (E) Afar **ʕasbo**, Som **ʕusbo**, Boni **usubbə**, Bayso **esebo** "salt", Oromo **aššabo'** "salt in small pieces" > Amh **ašäbo** "salt for human consumption" ||| Om: (N) ? Anfillo **ašabo** "salt", if not borrowed from Amh. (Lamberti 1986, 192, 302; Haberland & Lamberti 1988, 75).
Cf. OJp **sipo** "salt" (> Ainu **sippo** id.).

121. Dr ***kaṟ-** "to milk" (D 1385: I)

AA ***kar-** "curdled milk, butter" > Sem: Syr **kar^{e}-** "beestings, colostrum, curdled milk" ||| Cu: (N) Beja **kar** "frische, nicht geschmolzene Butter" (Almkvist) || (E) Rendille **keéra** "fresh milk" (Galboran & Pillinger) ||| Berb: Ahaggar **akru**, pl. **ikrûten** (Foucauld), Ayr **aḳəru / iḳərutăn** "lait coagulé", cf. Iulemidden **ḳărăw** "être coagulé" (Alojaly).
Cf. Sum **ga** "milk", **gára$_{x+1}$** "cream" > Akk **garūm** id. (AHw 282). Militarev 1984[ms.]: Sum + AA (Syr+Beja+Ahaggar); Boisson 1989[ms.]: Sum + Dr; Blažek 1999, 57: Dr + AA + Sum.

122. Dr ***alaku** "blade of a weapon, head of an arrow" (D 237: I, III)
AA ***Hal/ra[k/g]-** > Ch: (W) Dera **rɪga**, Karekare **rəŋká**, Gerumai **riya**, Bole **ria** || (C) Margi **lágà**, Kilba **laga**; Higi Nkafa **rigi**; Gude **raga**, Bachama **rage**; Lamang **lɛxɛ**; Wandala **ə́lkạ**, Glavda **làà́gha**; Gisiga **helek**, Muktele **álàk**, Mafa **lɛkɛɛḍ**, etc. "bow" (JgIb 1994, 38-39) ||| ? Eg (Pyr) **rwḏ** "Bogensehne", (N) **rwḏ.t** "etwas an Peitsche und Bogen" (Wb. II, 410), if it is not derived from (Pyr) **rwḏ** "fest sein" (ibid.), cf. Oromo **rubuu** tendon, nerve, string of bow" vs. Som **rib-** "strong" (Sasse 1982, 159). See Greenberg 1963, 53, #12: CCh + Eg; Blažek 1999, 56: Dr + CCh + NElamite **ulkina** "weapon" or "reed arrow".

123. Dr ***cil-** "bow" (D 2571: I)
AA: Ch: (C) Balda **sālá**, Mafa **sūlóm** "arrow" (Strümpell) = **súlɔ́ɔ̀m** id. (Seignobos) = **sulɔ̀ŋ** id. (Kraft); Gulfei **síɛ̨l** id. (Lukas).
Cf: Kartv ***mšwil-** "bow" (EWKS 248) ||| ? Alt: MKor **sár** "arrow, sting" (AEW #920: Kor + OJp **sas(i)-** "prick, stab, sharp stick" || Tk ***sīl / *sīl** "tooth" || Mong ***sidün** "tooth").

Dravidian Sub-grouping

I. Tamil, Malayalam, Irula, Kurumba, Kota, Toda, Kannada, Kodagu.
II. Tulu, Belari, Koraga.
III. Telugu.
IV. Kolami, Naiki.
V. Parji, Gadba.
VI. Gondi, Konda, Pengo, Manda, Kui, Kuwi.
VII. Kurukh, Malto.
VIII. Brahui

Abbreviations

AA Afroasiatic, Akk Akkadian, Alt Altaic, Amh Amhara, Arab Arabic, Aram Aramaic, Av Avestan, Berb Berber, Bibl Biblical, C Central, Celt Celtic, Ch Chadic, Cu Cushitic, Dr Dravidian, E East, Eg Egyptian, El Elamite, FeLp Fenno-Lappic, FeMd Fenno-Mordvinian, FePerm Fenno-Permian, FeVo Fenno-Volgaic, FU Fenno-Ugric, Ge Georgian, Hebr Hebrew, IE Indo-European, Jp Japanese, Kartv Kartvelian, Kor Korean, Lat Latin, M Middle, Mong Mongolian, N North, O Old, Om Omotic, p proto-, Phoen Phoenician, S South, Sem Semitic, Som Somali, sp. species of.., Sum Sumerian, Syr Syrian, Tk Turkic, Tung Tunguz, Ugar Ugaritic, Ural Uralic, W West.

References

Abaev, V.I. 1973: *Istoriko-ėtimologičeskij slovaŕ osetinskogo jazyka.* Moskva: Nauka.
AED *Altaic Etymological Dictionary*, by Starostin, S., Dybo, A. & Mudrak, O. Moscow 1995: Ms.
AHw von Soden, W. 1965-81: *Akkadisches Handwörterbuch.* Wiesbaden: Harrassowitz.

AMS Amborn, H., Minker, G. & Sasse, H.-J. 1981: *Das Dullay.* Berlin: Reimer.
Andronov, M.S. 1978: *Sravnitel'naja grammatika dravidijskix jazykov.* Moskva: Nauka.
Appleyard, D.L. 1984: The internal classification of the Agaw languages: A comparative and historical phonology. In: J. Bynon (ed.), *Current Progress in Afro-Asiatic Linguistics. Papers of the Third International Hamito-Semitic Congress.* Amsterdam - Philadelphia: Benjamins, pp. 33-67.
Bender, M.L. 1971: The languages of Ethiopia. A new lexicostatistic classification and some problems of diffusion. *Anthropological Linguistics* 13/5, pp. 165-288.
Bender, M.L. 1975: *Omotic: A New Afroasiatic Language Family.* Carbondale: University Museum Studies.
Bender, M.L. 1994: Aroid (South Omotic) Lexicon. *Afrikanistische Arbeitspapiere* 38, pp. 133-162.
Biella, J.C. 1982: *Dictionary of Old South Arabic.* Chico: Scholar Press.
Black, P. 1974: *Lowland East Cushitic: Subgrouping and Reconstruction.* Yale University Ph.D. Dissertation.
Blažek, V. 1989-90: Lexica Nostratica: Addenda et Corrigenda, I-II. *Archív orientální* 57, pp. 201-10 & 58, pp. 205-218.
Blažek, V. 1992: The new Dravidian-Afroasiatic parallels. Preliminary report. In: *Nostratic, Dene-Caucasian, Austric and Amerind*, ed. V. Shevoroshkin. Bochum: Brockmeyer, pp. 150-65.
Blažek, V. 1994: Elephant, hippopotamus and others: some ecological aspects of the Afroasiatic homeland. *Asian and African Studies* 3/2, pp. 196-212.
Blažek, V. 1996: Greek λείριον. *Sborník prací Filosofické fakulty Brněnské university* N 1, pp. 21-25.
Blažek, V. 1999: Elam: a bridge between Ancient Near East and Dravidian India ? In: *Archaeology and Language* IV: *Language Change and Cultural Transformation*, eds. Roger Blench & Matthew Spriggs. London - New York: Rotledge, pp. 48-78. [Reprinted in this issue.]
Blažek, V. & Boisson, C. 1992: The Diffusion of Agricultural Terms from Mesopotamia. *Archív orientální* 60, pp. 16-37.
Boisson, C. 1989 [ms.]: *Sumerian / Nostratic / Sino-Caucasian isoglosses*. Lyon: Ms.
Bomhard, A.R. 1984: *Toward Proto-Nostratic.* Amsterdam - Philadelphia: Benjamins.
Bomhard, A.R. & Kerns, J.C. 1995: *The Nostratic Macrofamily: A Study in Distant Linguistic Relationship.* Berlin - New York - Amsterdam: Mouton de Gruyter.
BSOAS *Bulletin of the School of Oriental and African Studies.*
Calice, F. 1936: *Grundlagen der ägyptisch-semitischen Worvergleichung.* Wien: Oriental. Institut des Uni.
Cerulli, E. 1936-51: *Studi etiopici*, I-IV. Roma: Istituto per l'Oriente.
Cohen, D. et al. 1970f: *Dictionnaire des racines sémitiques.* Paris-La Haye: Mouton.
Cohen, M. 1947: *Essai comparatif sur le vocabulaire et la phonétique du chamito-sémitique.* Paris: Champignon.
D Burrow, T. & Emeneau, M. 1984: *A Dravidian Etymological Dictionary*, 2nd ed. Oxford: Clarendon Press.
Dmitrieva, L.V. 1972: Nazvanija rastenij v tjurkskix i drugix altajskix jazykax. In: *Očerki sravnitel'noj leksikologii altajskix jazykov*. Leningrad: Nauka.
Dolgopolsky [Dolgopol'skij], A. 1966: Materialy po sravnitel'no-istoričeskoj fonetike kušitskix jazykov: gubnye i dental'nye v načal'nom položenii. In: *Jazyki Afriki*, ed. B.A. Uspenskij. Moskva: Nauka, pp. 35-88.
Dolgopolsky [Dolgopol'skij], A. 1973: *Sravnitel'no-istoričeskaja fonetika kušitskix jazykov.* Moskva: Nauka.

Dolgopolsky, A. 1983: Semitic and East Cushitic: Sound correspondences and cognate sets. In: *Ethiopian Studies (Fs. W. Leslau)*, eds. S. Segert & A.J.E. Bodrogligeti. Wiesbaden: Harrassowitz, pp. 123-142.

Dolgopolsky, A. 1995: *Ancient Roots in Hamito-Semitic, Indo-European, Kartvelian, Uralic, Altaic, and Dravidian. An essay of comparative dictionary*. Ms.

Dybo, A. 1988: Étimologičeskij material k rekonstrukcii pratungusomaňčžurskix nazvanij častij tela. In: *Sinxronija i diaxronija v lingvističeskix issledovanij*, I. Moskva: Institut vostokovedenija, pp. 108-27.

Dybo, A. 1989: Methods in systemic reconstruction of Altaic and Nostratic lexics. In: *Lingvističeskaja rekonstrukcija i drevnejšaja istorija Vostoka*, I. Moskva: Nauka, pp. 196-207.

Ehret, C. 1980: *The Historical Reconstruction of Southern Cushitic Phonology and Vocabulary.* Berlin: Reimer.

EIEC Mallory, J.P. & Adams, D.Q. (eds.) 1997: *Indo-European Culture*. London & Chicago: Fitzroy Dearbon.

EWKS Fähnrich, H. & Sardshweladse, S. 1995: *Etymologisches Wörterbuch der Kartwel-Sprachen.* Leiden-New York-Köln: Brill.

Gragg, G. 1982: *Oromo Dictionary.* East Lancing: African Studies Center.

Haberland, E. & Lamberti, M. 1988: *Ibaaddo ka-Ba'iso: culture and language of the Ba'iso.* Heidelberg: Winter.

Hayward, D. 1979: Bayso revisited. *BSOAS* 44, pp. 126-144.

Hayward, D. 1984: *The Arbore Language.* Hamburg: Buske.

Heine, B. 1978: The Sam languages. A history of Rendille, Boni and Somali. *Afroasiatic Linguistics* 6/2, pp. 23-115.

Heine, B. 1981: Some cultural evidence on the early Sam-speaking people of Eastern Africa. *Sprache und Geschichte in Afrika* 3, pp. 169-200.

Heine, B. 1982: *Language and Dialect Atlas of Kenya: Boni Dialects.* Berlin: Reimer.

Hetzron, R. 1978: The nominal system of Awngi (Southern Agaw). *BSOAS* 41, pp. 121-141.

Holma, H. 1911: *Die Namen der Körperteile im Assyrisch-Babylonischen.* Helsinki: Annales Academiae Scientiarum Fennicae, Ser. B, Tom VII.1.

Hudson, G. 1989: *Highland East Cushitic Dictionary.* Hamburg: Buske.

Illič-Svityč, V.M. 1971-76-84: *Opyt sravnenija nostratičeskix jazykov*, I-III. Moskva: Nauka.

JgIb Jungraithmayr, H. & Ibriszimow, D. 1994: *Chadic lexical roots*, Vol. II: *Tentative reconstruction, grading and distribution.* Berlin: Reimer.

KESK Lytkin, V.I. & Guljaev, E.I. 1970: *Kratkij ėtimologičeskij slovaŕ komi jazyka.* Moskva: Nauka.

Klein, E. 1987: *A Comprehensive Etymological Dictionary of the Hebrew Language*. New York - London: Macmillan.

Kossmann, M. 1999: *Essai sur la phonologie du proto-berbère*. Köln: Köppe.

Kraft, C. 1981: *Chadic Wordlists*, I-III. Berlin: Reimer.

Krebernik, M. 1983: Zu Syllabar und Orthographie der lexikalischen Texte aus Ebla, Teil 2. *Zeitschrift für Assyriologie* 73, pp. 1-47.

KZ *Zeitschrift für vergleichende Sprachforschung* ("*Kuhn's Zeitschrift*").

Lamberti, M. 1986: *Die Somali-Dialekte.* Hamburg: Buske.

Lamberti, M. 1987: Some Konsoid Etymologies. *Anthropos* 82, pp. 529-541.

Lamberti, M. 1993: *Die Shinasha-Sprache.* Heidelberg: Winter.

Lamberti, M. & Sottile, R. 1997: *The Wolayta Language.* Köln: Köppe.

Leslau, W. 1938: *Lexique soqotri.* Paris: Klincksieck.

Leslau, W. 1959: *A Dictionary of Moča (Southwestern Ethiopia).* Berkeley-Los Angeles: University of California Press.

Leslau, W. 1979: *Etymological Dictionary of Gurage (Ethiopic)*, III: *Etymological Section.* Wiesbaden: Harrassowitz.

Leslau, W. 1987: *Comparative Dictionary of Geᶜez (Classical Ethiopic).* Wiesbaden: Harrassowitz.

Littmann, E. & Höfner, M. 1962: *Wörterbuch der Tigrē Sprache.* Wiesbaden: Steiner.

LVC Leus, T., Van de Loo, J. & Cotter, G. 1992: *A Vocabulary of Oromo- English.* Debre Zeït (Ethiopia).

Lukas, J. 1937: *Zentralsudanische Studien.* Hamburg: Friedrichsen, de Gruyter & Co.

Mann, S.E. 1984-87: *An Indo-European Comparative Dictionary.* Hamburg: Buske.

McAlpin, D.W. 1981: *Proto-Elamo-Dravidian: The Evidence and its Implications.* Philadelphia: *Transactions of the American Philosophical Society*, NS. Vol. 71, Part 3.

Militarev, A. 1984: Afrazijsko-šumerskie leksičeskie svjazi. In: *Lingvističeskaja rekonstrukcija i drevnejšaja istorija Vostoka*, I. Moskva: Nauka, pp. 58-61 [the full text written in English is available only as a ms.].

Militarev, A. 1990: Afrasian cultural terms (preliminary report). In: *Proto-languages and Proto-Cultures*, ed. V. Shevoroshkin. Bochum: Brockmayer, pp. 33-54.

Militarev, A. 1991: Istoričeskaja fonetika i leksika livijsko-guančskix jazykov. In:*Jazyki Azii i Afriki*, IV (Afrazijskie jazyki) 2. Moskva: Nauka, pp. 238-267.

Morgenstierne, G. 1927: *An Etymological Vocabulary of Pashto.* Oslo: Dybwad.

Morgenstierne, G. 1974: *Etymological Vocabulary of the Shugni Group.* Wiesbaden: Reichert.

Mouchet, J. 1950: Vocabulaires comparatifs de quinze parlers du Nord-Cameroun. *Études camerounaises* III/29-30, pp. 5-74.

Mouchet, J. 1953: Vocabulaires comparatifs de sept parlers du Nord-Cameroun. *Études camerounaises* VI/41-42, pp. 137-199.

Müller, W.W. 1962: *Die Wurzeln MEDIAE und TERTIAE y / w im Altsüdarabischen.* Tübingen: Diss.

Müller, W.W. 1975: Beiträge zur hamito-semitischen Wortvergleichung. In: *Hamito-Semitica (Proceedings of a Colloquium held in London* 1970), eds. J. & T. Bynons. The Hague-Paris: Mouton, pp. 33-50.

Newman, F.W. 1887: *Kabail Vocabulary.* London: Trübner.

Orel, V. & Stolbova, O. 1995: *Hamito-Semitic Etymological Dictionary.* Leiden - New York - Köln: Brill.

Parker, E.M. & Hayward, R.J. 1985. *An Afar-English-French Dictionary.* London: SOAS.

Pokorny, J. 1959*: Indogermanisches etymologisches Wörterbuch.* Bern-München: Francke.

Puhvel, J. 1997: *Hittite Etymological Dictionary* 4 (**K**). Berlin-New York: Mouton de Gruyter.

Prasse, K.-G. 1969: Á propos de l'origine de **h** touareg (tăhăggart). *Det kongelige Danske Videnskaberne Selskab Historisk-filologiske Meddelelser* 43.3 (København).

Prasse, K.-G. 1972-74: *Manuel de grammaire touarege* (tăhăggart), I-III, IV-V, VI-VII. Copenhague: Akademisk Forlag.

Rabin, Ch. 1975: Lexicostatistics and the internal divisions of Semitic. In: *Hamito-Semitica (Proceedings of a Colloquium held in London* 1970), eds. J. & T. Bynons.. The Hague-Paris: Mouton, pp. 85-99.

Ramstedt, G.J. 1935: *Kalmückisches Wörterbuch.* Helsinki: Lexica Societatis Fenno-Ugricae III.

Räsänen, M. 1969: *Versuch eines etymologischen Wörterbuchs der Türksprachen.* Helsinki: Lexica Societatis Fenno-Ugricae XVII, 1.

Reinisch, L. 1887: *Die Bilin-Sprache in Nordost-Afrka.* Wien: Hölder.

Reinisch, L. 1895: *Wörterbuch der Beḍauye-Sprache.* Wien: Hölder.

Reinisch, L. 1902: *Die Somali-Sprache*, II: *Wörterbuch.* Wien: Hölder.

Reinisch, L. 1911: *Die Sprachliche Stellung des Nuba.* Wien: Hölder (Schriften der Sprachkommision III).

Roper, E.-M. 1928: *Tū Beḍawiɛ.* Hertford: Herts.

Sammallahti, P. 1988: Historical Phonology of the Uralic Languages. In: *The Uralic Languages*, ed. D. Sinor. Leiden: Brill, pp. 478-554.

Sasse, H.-J. 1979: The consonant phonemes of Proto-East Cushitic (PEC). *Afroasiatic Linguistics* 7/1, pp. 1-67.

Sasse, H.-J. 1982: *An Etymological Dictionary of Burji.* Hamburg: Buske.

SISAJ *Sravnitel'no-istoričeskij slovaŕ afrazijskix jazykov*, I-III, eds. A.G. Belova, I.M. D'jakonov, A.Ju. Militarev, V.Ja. Porxomovskij, O.V. Stolbova, A.C. Četveruxin. Moskva: Nauka 1981, 1982, 1986 (*Pis'mennye pamjatniki i problemy istorii i kul'tury narodov Vostoka*, XV/IV, XVI/III & XIX/III *godičnaja sessija LO IV AN SSSR*).

SKES Toivonen, Y.H. et al. 1955f: *Suomen kielen etymologinen sanakirja.* Helsinki: Lexica Societatis Fenno-Ugricae XII, 1f.

Skinner, N. 1977: The Northern Bauchi Chadic Languages. *Afroasiatic Linguistics* 4/1, pp. 1-49.

Skinner, N. 1996: *Hausa Comparative Lexicon.* Köln: Köppe.

Sölken, H. 1967: *Seetzens Áffadéh. Ein Beitrag zur Kotoko-Sprachdokumentation.* Berlin: Akademie-Verlag.

Starostin, S.A. 1991: *Altajskaja problema i proisxoždenie japonskogo jazyka.* Moskva: Nauka.

Steingass, F. 1988: *Arabic-English Dictionary.* Jalandhar City: Gaurav.

Stolbova, O.V. 1987: Sravnitel'no-istoričeskaja fonetika i slovaŕ zapadnočadskix jazykov. In: *Afrikanskoe istoričeskoe jazykoznanie*, ed. V. Porxomovskij. Moskva: Nauka, pp. 30-268.

Stolbova, O.V. 1996: *Studies in Chadic Comparative Phonology.* Moscow: Diaphragma.

Takács, G. 1996: Selected new Egypto-Afrasian correspondences from the field of anatomical terminology. In: *Afroasiatica Neapolitana. Papers from the 8th Italian Meeting of Afroasiatic (Hamito-Semitic) Linguistics* (Napoli 1996), eds. A. Bausi & M. Tosco. Napoli: Istituto universitario orientale, pp. 225-50.

Tischler, J. 1990: *Hethitisches etymologisches Glossar*, Lief. 5 & 6 (**L-M**). Innsbruck: IBS 20.

TMS *Sravnitel'nyj slovaŕ tunguso-maňčžurskix jazykov* I-II, ed. V.I. Cincius et al. Leningrad: Nauka 1975-77.

Tosco, M. 1991: *A grammatical sketch of Dahalo.* Hamburg: Buske.

Tourneux, H., Seignobos, Ch. & Lafarge, F. 1986: *Les Mbara et leur lange (Tchad).* Paris: SELAF.

UEW Rédei, K. (ed.) 1986-88: *Uralisches etymologisches Wörterbuch.* Budapest: Akadémiai Kiadó.

Vendryes, J. 1978: *Lexique étymologique de l'irlandais ancien* (**T-U**). Dublin: Institute for Advanced Studies & Paris: Centre National de la Recherche Scientifique.

Vycichl, W. 1958: Grundlagen der ägyptisch-semitischen Wortvergleichung. *Mitteilungen des Deutschen archäologischen Instituts, Abt. Kairo*, Bd. 16 (Fs. H. Junker, II), pp. 367-405.

Vycichl, W. 1978: L'état actuel des études chamito-sémitiques. In: *Atti del Secondo Congresso Internazionale di Linguistica Camito-Semitica* (Firenze 1974), ed. P. Fronzaroli. Firenze: Quaderni di Semitica 5, pp. 63-76.

Vycichl, W. 1983: *Dictionnaire étymologique de la langue copte.* Leuven-Paris: Peeters.

W-H Walde, A. & Hofmann, J.B. 1938-54: *Lateinisches etymologisches Wörterbuch*, I-II. Heidelberg: Winter.

Wb. Erman, A. & Grapow, W. 1928-31[1971]: *Wörterbuch der ägyptischen Sprache*, I-VI. Berlin: Akademie-Verlag.

Wehr, H. 1958: *Arabisches Wörterbuch für die Schriftsprache der Gegenwart.* Wiesbaden: Harrassowitz.

Woelfel, D. 1955: *Eurafrikanische Wortschichten als Kulturschichten.* Salamanca: Acta Salmanticensia IX, 1.

Two Words : Two Worlds*

Panchanan Mohanty
University of Hyderabad

1. Introduction

There is general agreement among a sizeable number of linguists and anthropologists that language and culture have developed in correlation with each other. Based on this agreement Colby (1985), Keesing (1979), and Silverstein (1985) among others have proposed that the ability of human beings to understand language is inextricably interwoven with their encyclopedic knowledge of culture. I need not emphasize here that words are the most intuitively satisfying and significant linguistic units that act as the carriers of all kinds of knowledge including cultural knowledge. This is the reason scholars like Brown (1979) and Kay (1977) have argued that there exists a close relationship between cultural complexity and the structure of lexicon. In other words, a close study of the lexicon of a language will lead to the discovery of its cultural complexity and an analysis of the cultural complexity of a language will reveal its lexical structure. I should mention here that between language and culture the former, being handy, is much easier to be dealt with than the latter, which consists of so many facets. It is an established methodology to unravel the socio-cultural realities of a speech-community on the basis of the words used in it. In order to support this position I should quote Sapir (1979:193-194), who emphatically stated: "The careful study of such loan-words constitutes an interesting commentary on the history of culture. One can almost estimate the role which various peoples have played in the development and spread of cultural ideas by taking note of the extent to which their vocabularies have filtered into those of other peoples."

Scholars working on Oriya language[1] and culture, especially on Lord Jagannatha[2] (pronounced [jagan(n)a:tha]), must have come across two typical words: /puri/ and /nitia:ni/. The former is actually the name of a small town in which Lord Jagannatha's temple is situated, and the latter is the word used in Puri for 'milk'. The point to be noted here is that *Puri* is a strange place-name in the sense that it should not be used independently, as it means 'abode'. In other words, it is a sort of 'bound word' that is required to be attached to a preceding 'free word', e.g. *Vishnupuri* 'Vishnu's abode', *Shivapuri* 'Shiva's abode', *Indrapuri* 'Indra's abode', etc. I am trying to make the point that /puri/ in the sense of 'abode' cannot have an independent existence. If that is accepted, the question that will be asked is: How is it that Jagannatha's dwelling place has been named *Puri*? As the other word /nitia:ni/ is used only in and around the Puri town, while the Standard Oriya word for milk is /khira/ or /dudha/, it is obvious that there is a cause behind it. As no attempt has been made so far to account for these two words, I intend in this paper to discover the sources of both these words and determine their significance in the context of the culture of Puri in particular and Orissa in general.

Situating the Problem

According to the description found in *da:Thavamśa*, Brahmadatta, the king of Kalinga (i.e. an ancient name of modern Orissa), had got a tooth of Buddha from Theraputta Kshema and worshipped it, placing it on a century and the most authentic and representative work on Oriya culture, bears testimony to this statement.

* In this paper [T, Th, D, R, N, L, S] have been used for the voiceless unaspirated retroflex stop, voiceless aspirated retroflex stop, voiced unaspirated retroflex stop, unaspirated retroflex flap, retroflex nasal, retroflex lateral, and retroflex sibilant, respectively.

---

[1] Oriya is a Neo Indo-Aryan language and also the official language of the Indian state of Orissa.

[2] Jagannatha is the most important and tutelary deity of the Indian state ofOrissa. In the last millennium almost all the kings belonging to different dynasties have ruled this state by declaring themselves as His representative or deputy.

In fact, Jagannatha is addressed as Buddha time and again throughout this text. The following example will drive home the point. There is a description in the Banaparba that after the unburnt part of Srikrishna's body appeared as a log of wood in the Blue Mountain, an old carpenter all of a sudden came to king Indradyumna and volunteered to construct the images. The carpenter along with Jara Savara and Basu Brahmin closed the door of the temple and started making the images. But just half a day and a full night before the stipulated 18 days were completed, the king, not hearing the sound of the instruments used in construction of the images, became impatient and opened the door in violation of the condition, and saw the great Buddha image in three separate bodies. (*Banaparba*, Part-II, p.188-9). Again, Srikrishna, in Musaliparba, tells Jara Savara :

> "As per the wish of Lord Brahma I will spend four *lakh*[3] and thirty-two thousand years in the Kaliyuga as the incarnation of Buddha killing the wicked people and protecting the saints." (p.109)

Many other ancient Oriya poets, like Salabega, have also described Jagannatha as Buddha. Most probably because of this close affinity between Jagannatha and Buddha there is an opinion prevalent in Orissa that the /brahmapada:rtha/ `divine thing' inside Jagannatha's image is a tooth of Buddha. Based on this a hypothesis has been put forward that the name of this place was Dantapuri in the ancient times and today's 'puri' is just an abbreviation of it. But this hypothesis is a sheer conjecture based on the identification of Puri as Dantapura, though some other places have also been identified with it (See Ganguly 1975:25-27, Singh 1994:36).

Actually, this tooth of Buddha was worshipped in Kalinga for four generations until Guhashiva, who was Sunanda's son, Kashiraja's grandson, and Brahamadatta's great grandson. When Pandu, the king of Pataliputra (ancient name of modern Patna, capital of the Indian state of Bihar), came to know about it, he sent a large army to imprison Guhashiva. But by then the latter had left for Pataliputra on his own to present the tooth-relic to Pandu. Surprisingly, on the advice of his courtiers, Pandu tried to burn it, but in vain. Then he ordered that it should be thrown into the ocean; but nothing happened to it. These made Pandu realize that it possessed some supernatural power, and he allowed Guhashiva to go back to Kalinga along with the tooth-relic. After some time Danta Kumara, a prince of Ujjayaini (a town in the Indian state of Uttar Pradesh), came to Kalinga to worship the tooth-relic. Guhashiva was deeply impressed by Danta Kumara's devotion and married his daughter Hemamala to the latter. The newly wed couple lived happily in Kalinga. In the meantime some relatives of Kshiradhara, an old enemy of Pandu, reached Kalinga to take away the tooth-relic. In order to avoid any further danger, Guhashiva sent Danta Kumara and Hemamala with the tooth to his close friend and king of Lanka, Mahendrasena. But when Danta Kumara and Hemamala arrived at Lanka (now Sri Lanka). Mahendrasena's son Shirimegha was ruling there and he preserved the tooth-relic in a /caitya/ at Mahagiri Vihara with full respect. (Rajaguru 1968:185-6).

Thus, there is no reason to believe that Puri is an abbreviation of Dantapuri. Here it must be noted that the name of this place is Dantapura, and not Dantapuri. So if the abbreviation hypothesis is accepted, the result should have been 'pura', not 'puri'. Another point that must be brought to the notice of scholars is that the epics and *pura:Na*s possess references to modern Puri as Purushottama, Nilagiri, Nilachala, Nilakandara, Shrikshetra, etc; but never as Puri. Even as recently as in 1840-41, it has been referred to as Purushottamakshetra in a map, and therefore, some scholars believe that Puri is a shortened form of Purushottamapuri of Jagannathapuri (Mohapatra 1994: 27-8). Again, I will argue that it is not at all acceptable because no place name in and around the Puri district possesses the suffix 'puri'; it is 'pura' everywhere, e.g. Ramachandrapura, Chandanapura, Malatipatapura, Dandamukundapura, Patamahadeipura, etc. So Purushottamapuri and Jagannathapuri have to be a blend of Purushottama and Jagannatha with the existing place-name Puri. There are others who hold the view that "Puri is the new name for Shrikshetra (the apex or the best of all sacred centres of the country) or Purushottamakshetra ... ." (Patnaik 1977:12), but they are silent about its source and the time when it came into existence.

---

[3] One *lakh* = 100,000.

A close scrutiny of the extant records reveal that the name 'Puri' has become popular only after the advent of the British in Orissa. An important piece of evidence in support of this claim is found in *ma:daLa:pa:nji,* the Jagannatha temple's chronicle. Though everywhere else Purushottama and its variants have been used in this text, 'Puri' is found towards the end, i.e. during the reign of King Mukundadeva II (1795-1817):

> "jagabandhu bidya:dharanka sa:ha:jya boli mukundadebanku bandi kari kaTaka nele. ma:tra se nirdosi boli prama:Na paiba:ru ta:ha:nku jaganna:tha debanka seba:puja: bujhiba:saka:se ma:saku Ta2333nka: khoradha:ma:lika:na: sutre dei purusa:nukrame puriTha:re rahiba:saka:se gabharnamenTa agya:dele." (Mohanty 1940:82:3)
>
> (With Jagabandhu Bidyadhar's help Mukundadeva was taken to Cuttack as a prisoner. But as it was proved that he was innocent he was given Rs.2,333.00 per month for performing LordJagannatha Deva's worship as the lordship of Khurda and the Government ordered him to stay at Puri for generations to come. Tr. by P.M.)

I wish to argue that after the British occupied Orissa the name 'Puri' became popular. If this argument is accepted, the following question has to be answered: Why did the name `Puri' not get a place in the epics and *pura:Nas*? Let us first look into it.

3. The Place Name *Puri*

Orissa occupies a strategic place in the Indian subcontinent from the linguistic as well as cultural point of view. It is, in fact, a confluence of the major linguistic and cultural traits found in this country, i.e. Aryan, Dravidian, Munda, and Tibeto-Burman (For a detailed discussion of linguistic area see Masica 1976; Mohanty 1997a, 1997b). As Jagannatha, the first deity of Puri in particular and Orissa in general, is believed to be a Savara (or Munda) god, I will deal with this aspect only. Out of a dozen of the Munda languages in total, almost all, except Korku, are spoken in Orissa. Again, as per the description given in *sa:raLa: maha:bha:rata,* Nilachala is a very old place inhabited by the Savaras since time immemorial. For example, when Arjuna was cremating the mortal remains of Srikrishna, Lord Brahma made the following oracle:

> Don't destroy that body oh great fighter
> Let that body be worshiped as Narayana of Kaliyuga
> Arjuna will take it out from fire and immerse it
> in the sea
> It will appear in the Blue Mountain
> He will be pleased with the kira:ta
> Jara Savara will worship that body. (*Banaparba*, Part-II, p.182; tr. by P. M.)

Again Sarala Dasa has stated:

> A Brahmin named Basukara
> He would reach the beautiful Blue Mountain.
> On the bank of Indrajamuni the Brahmin would wander
> In the north at a distance he would see the Savara hamlet.
> Then he entered the Savara village
> He saw a Savara woman on the way. (*Banaparba*, Part-II, p.183-4; tr. by P. M.)

Besides all these, historians like Panigrahi (1986) hold the view that before the Bhaumas, who came from Assam, occupied Orissa in the first half of the 8th century the Puri region was ruled by the Savaras. The Bhaumas "... obtained the shrine from the Savaras, got the wooden altar carved into three images, enshrined

them in a temple built on the spot and gave it the name Nilachala which was the name of the famous shrine of Kamaskhya in their homeland of Assam." (Panigrahi 1986:338-9). Kulke (1978:130) also refers to Chodaganga's inscriptions of Korni and Vizagapatanam, wherein it is stated that his ancestor Kamarnava had conquered Kalinga after killing Sabaraditya, supposedly a Savara Chief.

From all these it follows that there was a Savara settlement at Puri, and most probably they were the earliest settlers there. Then, of course, it was natural on their part to give a name to this place. I very strongly believe the ancient Munda or Savara name of this place was nothing else but 'Puri', because in many Munda languages this word refers to 'sea' or 'water-reservoir'. For example, /pur/ means 'flood' in Bonda (Bhattacharya 1968:87). In another Munda language Santali, /puri/ has the following four meanings: (i) the world, (ii) the sea, (iii) place, and (iv) abode, and its source has been determined to be /puri:/ of Hindi (Bodding 1993, Vol.IV:680). Notice that though the senses like 'the world', 'place', and `abode' tally perfectly with the Hindi word, so far as the remaining sense, i.e. 'the sea' is concerned the Santali word has nothing to do with that of Hindi. In other words, /puri/ in Santali is a homonym that comprises two words: one comes from Hindi while the other is native. What I claim here is that the native /puri/ of Santali refers to 'the sea'. Sora also has a word /purri:/ which means 'to corrode' (Ramamurti 1986:221). Finally, according to Hoffmann's (1990:3350) *Encyclopaedia Mundarica* /pur/ means 'the gushing out of boiling water from a covered vessel, the gushing up of water or dust into which red-hot iron is plunged, the gushing up of steam and ashes when water falls on fire' and /puri/, 'the bubbling on the surface of a boiling liquid' and 'the scum on cooking rice, on stew, on boiling liquids', etc. Taken together all these evoke the picture of a sea quite explicitly. It will not be out of place to state that /pur ~ pura/ is used in the sense of 'flood' in Desia spoken in Southern Orissa and Northern Andhra, and its source is the above-mentioned Munda word.

An important point to be mentioned here is that there is no separate word for 'sea' in the Munda languages in general. That is why in many cases they have borrowed words from neighbouring languages to refer to 'sea'. For instance, Bonda and Didayi use /samdar/ (Bhattacharya 1968:138); Sora, /samandra:n/, (Ramamurti 1931:74); Ho, /dorea/ (Burrows 1980:140) and Korku, /Derwa/ (Nagaraja 1999:301). The absence of a native word for `sea' in the Munda languages is also indicative of the natural background from which the Munda people come. In all probability these people had never seen a sea before reaching the east coast of India. When they saw the sea for the first time in their lives, it is quite possible that they spontaneously used /puri/ for its violent effusion as well as the enormous amount of surf on its surface. To sum up this discussion, my contention is that the original Munda word /puri/ has undergone a semantic extension to refer to 'sea', and consequently, after the Savaras settled down in the tiny sea-side hamlet it acquired the name Puri for itself. It never found a place in the epics and *pura:Na*s as it was un-Sanskritic and was used by the masses in their day-to-day ordinary conversation, whereas Purushottamakshetra, Shrikshetra, Nilachala, Nilakandara, etc. were used in the epics and *pura:Na*s because these were considered sacred due to their Sanskritic origin. As a piece of supporting evidence for this observation it won't be out of place to mention that the Bhauma-Kara dynasty, which ruled over Orissa for about two centuries between 736 and 931, did not even find a mention either in the Sanskrit works containing some historic traditions (e.g. *eka:mra pura:Na*) or in the *ma:daLa:pa:nji*, the chronicle of the Jagannatha temple, most probably because the rulers of this dynasty were "unorthodox" and "non-Aryan" in origin. "The orthodox Brahmins, who were the repositories of all traditions, have ignored them for this reason". (Panigrahi 1981:66). This dynasty was discovered only in the beginning of the 20th century.

4. The Strange but Unique Word /nitia:ni/

Though Puri is included in the Standard Oriya speaking area, its language is conspicuously different from that of the rest of the area because of its use of the unusual word /nitia:ni/ for milk. The question that arises here is: What is its source and how did it come into use? The readymade answer which almost every person from Puri gives in response to this question is that /gauRa niti a:Nidie boli nitia:ni/ or 'It is

/nitia:ni/ because the milk-vendor brings (/a:Nidie/) it daily (/niti/)'. But there is little doubt that it is a folk-etymology. So we will have to look for its source somewhere else. Actually, it is very intimately related to the foregoing discussion on Puri.

Munda is a branch of the Austroasiatic family of languages. "As regards the original home of these people all the present linguistic points to the east - very probably the south-eastern portion of China as the original home of the people speaking Mundari (Munda) and Monkhmer languages." (Karve 1965:315). Again, that most of the Munda speaking communities have entered India through the northern and north-eastern frontiers is well recognised by now (Bhattacharya 1976:1-15, Dalton 1978:224). Therefore, it is quite logical to expect that the Munda speech communities must have come in close contact with the Tibeto-Burman speaking people and there must have been a give-and-take between them at the linguistic, cultural and social levels. In fact, a comparison between the languages and cultures of both the stocks strongly supports this position. Let us take two examples: one from language and the other from culture.

It is interesting to note that when most Indo-Aryan and Dravidian languages derive their words for twenty from 'two-ten', meaning 2 x 10, most Munda and Tibeto-Burman languages have special words for this numeral. For example, though the North Munda languages like Santali (/isi/), Mundari (/hisi/), Birhor (/bis/) and Korku (/isa/) use words derived from Hindi /bi:s/ 'twenty', the South and Central Munda languages use a variant of /koRi/, e.g. Didayi /kuRi/, Bonda /kaRe/, Sora /bo-koRi/, Juang /kuRi/, etc. But Parengi still retains /mika:n/ which is certainly a cognate of the word for twenty used in some Tibeto-Burman languages, e.g. /maku/ in Tangkhul-Naga. Again, variants of /koRi/ are also found in some Tibeto-Burman languages, e.g. Boro /kuri/, Garo /kor-grik/, Meitei /kul/. These examples clearly show that the Munda and Tibeto-Burman languages not only share the same concept of twenty, but also the words expressing it are derived from the same sources.

Now let us consider an example from the domain of culture. In the typical Aryan India, i.e. in the states of Jammu and Kashmir, Punjab, Haryana, Himachal Pradesh, and Uttar Pradesh, as well as in the four Dravidian-speaking states, i.e. Tamil Nadu, Kerala, Karnataka, and Andhra Pradesh, there exists a normal relationship between married women and their husbands' elder brothers. On the contrary a relationship of avoidance is observed between them in the Munda and Tibeto-Burman speaking communities. It is also customary for a younger brother to marry his elder brother's wife after the latter's death in the communities belonging to both the Munda and Tibeto-Burman stocks. (In the anthropological jargon this system is called 'levirate'.) However, in this context I want to mention that similarly no married woman is allowed to talk with, or even look at, her husband's elder brother in the Oriya society. On other hand, though hardly an Oriya man marries his elder brother's wife in the event of the latter's death they enjoy a very close and jocular relationship. It is evident that the prevalence of these customs in Oriya society is solely due to its convergence with those of the surrounding Munda communities. With these, let us get down to the problem of /nitia:ni/.

Studies on the Tibeto-Burman societies reveal that they never use milk; rather they abhor it. Regarding the Mishmis, Dalton (1978:15) states: "They do not use them (cattle) for agricultural purposes or for their milk." The Hill-Miris, according to him, also do not touch milk (Ibid:31). Again, with reference to the Garos he writes "... they have no aversion to any food, except milk, which they abominate..." (Ibid:62). The very same trait is found among the Mundas also. The following words from Dalton (1978:195) authenticate this observation: "The Kols plough with cows as well as oxen, but it is to be recollected that they make no other use of the animal as they never touch milk." Frazer (1986:293) has also reported that this practice is in vogue among some hill tribes, especially the Hos: "The cattle are used only for ploughing for the Hos, like many other hill tribes of India they never touch milk." In other words, for both the Munda as well as Tibeto-Burman peoples, milk is forbidden. This aspect of Munda culture is reflected in the language as well. Most Munda languages possess unrelated words for milk. For example, it is /Da:ktar ~ Da:ʔtar/ in Bonda, /toa/ in Santali, /a:duban/ in Sora, /Dra:/ in Didayi, /nunu/ in Kharia, and /dud ~ Dud ~ DiDom/ in Korku, etc. Notice that though there are lots of variations with reference to the word for milk, every Munda language uses either /da:/ or one of its variants for water. I

want to argue here that the word for 'water' is inherited by the Munda languages from their parent whereas the words for milk are either coined or acquired later from other sources.

A close look at the data obtained from various languages spoken all over the world shows that it is an established norm to use an equivalent descriptive and circumlocutory expression for a forbidden or taboo object. This is the reason Sanskrit, Greek and Latin, though daughters of the same Proto-Indo-European parent, use three different words, i.e. /candra/ literally 'shining', φεγγάρι /feŋgári/ (Modern Greek) 'that which shines', and /lu:na/ 'that which glitters', respectively, for the moon. In rural Orissa, people often use /ha:Ria:Ni/ or 'scavengress' for the house lizard and /lambajantu/ or 'long animal' for the snake.

If we count the words for 'milk' used in Oriya there are at least six, e.g. /gurasa/, /naLa:pa:Ni/, /okhara/, and /nitia:ni/, besides the commonly used /khira/ and /dudha/, while there is only one word /dahi/ for 'curds', and another, /ghia/ for 'ghee', used all over the Oriya-speaking tracts. My contention is that 'milk' has become a taboo in Oriya under the Munda influence, and that is why there are so many circumlocutory expressions to refer to it. /gurasa/ is derived by adding /rasa/ 'juice' to /go/ 'cow' and it literally means 'cow's juice'. /naLa:pa:Ni/ which apparently seems strange and unintelligible is actually a descriptive expression. It is a blend of the Dravidian word /nara:/ 'white' and Oriya /pa:Ni/ 'water'. In other words, it means 'white water'. I should mention here that as there is no word like /nara:/ in Oriya, and the Oriya speakers have changed it to an existing Oriya word /naLa:/ `drain' without realizing the significance of the former. Of course, each language undergoes many such changes in its growth and development. Then /okhara/ is also a descriptive expression that consists of two Dravidian words: /o/ 'appropriate, equal, fit' and /kara/ 'sap issuing from trees, gum, juice of fruit, etc.' This /kara/ has become [khara] due to stress on the non-initial syllable as it has happened in the case [sakha:La] (/saka:La/) 'morning' or [majbhut] (/majbut/) 'strong'. The literal meaning of /okhara/ is `appropriate, equal or fit (i.e. drinkable) sap or juice'. Thus, all these words are circumlocutory expressions for milk. Let us now consider /nitia:ni/.

Though the Savara or Munda god Jagannatha has existed since time immemorial, he gained importance only after the Dravidian Gangas had ascended the throne of Orissa. The Somavamsis, the Bhanjas, and the Nandas, who occupied the throne of Orissa before the Gangas, were worshippers of Siva. So it is obvious that Jagannatha did not gain much importance during their rule. The present gigantic and architecturally marvellous Jagannatha temple of Puri was in fact built by Anantavarmana Chodaganga (1078-1150), founder of the Ganga dynasty in Orissa. The *devada:si:* (i.e. God's maid-servant) dance ritual in the temple was also introduced by the Gangas. Thus, it can be claimed that the process of Dravidianization of Lord Jagannatha and his culture started with the Ganga rule, though Dravidian influence on the language and culture of Orissa certainly existed before that. The presence of an enormous number of Dravidian words in the temple register bears testimony to this claim. For example, /lenka:/ 'servant', /muduli/ 'chief', /kuRua:/ 'earthen pot', /koili baikuNTha/ 'temple Vaikuntha', /chera: pahãra:/ 'dirt sweeping', etc.

I propose that /nitia:ni/ is also a Dravidian word. It should be recalled that during his visit to Puri (at the end of the 11th century or the beginning of the 12th century) Ramanuja (1056-1137), the great Vaishnava-theologist of the Chola empire, could not succeed in getting Brahmin priests appointed for the worship of Lord Jagannatha. From this it is evident that Savaras or Daitas were worshipping Jagannatha at that time (Sahu 1996:37-38). In other words, until then the Munda culture was dominant in Puri as well as in the temple of Jagannatha. So it is obvious that, along with other customs, the use of milk by the Dravidian Gangas must have been detested by the people, and there must also have been a strong resistance to its introduction in the temple. It could have been one of the reasons which forced Chodaganga, who was a /paramama:heśwara/ `staunch Saiva' on his own admission in 1112, to proclaim himself /paramabhaTTa:rakah-paramavaiṣṇavah-paramabra:hmaNya/ in 1135 (Rajaguru 1972:40). Thus, finally both the camps most probably settled for a compromise, and in this process milk was renamed as /nitia:ni/.

The other point I want to mention is that like /gurasa/, /naḷa:pa:Ni/, and /okhara/ the expression /nitia:ni/ also consists of two words: /ney/, meaning 'butter, ghee, honey, etc.', and /taNNi/ meaning 'water'. This /ney/ is pronounced as /niy ~ ni: ~ ni/ in the Dravidian tribal languages, like Kui, Kuvi, Konda, and

Gondi, spoken in and around Orissa. Further, just as /akkhi/ and /paNNa/ of Prakrit become /a:khi/ 'eye' and /pa:na/ '(betel) leaf' in Oriya, it is natural for /taNNi/ to become /ta:ni/[4] through cluster simplification and lengthening of the preceding vowel. Thus, we get /nita:ni/, and it is used for milk even now in some of the remote areas of Orissa.[5] But it is a typical characteristic of the Puri dialect to pronounce /a:/ as /ya: ~ ia:/, e.g. [sya:nti] for /sa:nti/ 'peace' and [sya:pa] for /sa:pa/ 'curse'. Following this rule /nita:ni/ has become [nitya:ni] or [nitia:ni]. Thus, the derivational history of this word can be proposed as follows:

ney-taNNi --> niytaNNi --> nita:ni --> nitya:ni ~ nitia:ni

5. Concluding Remarks

To conclude: firstly, it has been argued in this paper that *Puri,* as it was believed so far, is not an Old Indo-Aryan or Sanskrit word; but a Munda word that refers to 'sea'. This interpretation adduces evidence that the Savaras or Mundas were the first inhabitants of Puri, and this, in turn, further strengthens the Munda origin of Jagannatha.[6] Secondly, the use of the Dravidian compound /nitia:ni/ – literally meaning 'butter-water, ghee-water, honey-water' – for 'milk' implies that milk was a taboo for the people ofPuri. Most probably it was first introduced in Jagannatha temple, and from there it spread to the outer society only after the Dravidian Gangas occupied the throne of Orissa. It is also clearly indicative of the Dravidianization of Lord Jagannatha and his culture. Finally, this paper demonstrates that cultural history of the past can be discovered and reconstructed by analyzing some key lexical data, and thus, it vindicates the ethno-linguistic methodology.

References

Ashirvadam, K. 1992. *The Structure of Didayi: An Austroasiatic Language.* Unpublished Ph.D. thesis. Hyderabad: Osmania University.

Benveniste, E. 1979. *Indo-European Language and Society*. London: Faber & Faber.

Bhat, D.N.S. 1968. *Boro Vocabulary*. Poona: Deccan College.

Bhattacharya, S. 1968. *A Bonda Dictionary*. Poona: Deccan College.

Bhattacharya, S. 1976. *Studies in Comparative Munda Linguistics*. Simla: Indian Institute of Advanced Study.

Bodding, P. O. 1993. *A Santhal Dictionary, Vols. IV & V.* New Delhi: Gian Publishing House. (reprint)

Brown, Cecil H. 1977. Folk Botanical Life Forms, Their Universality and Growth. *American Anthropologist* 79:317-342.

Brown, Cecil H. 1979. Folk Zoological Life Forms, Their Universality and Growth. *American Anthropologist* 81:791-817.

Burling, R. 1961. *A Garo Grammar*. Poona: Deccan College & Linguistic Society of India.

Burrow, T. & M. B. Emeneau. 1984. *A Dravidian Etymological Dictionary*. Oxford: Clarendon Press. (revised edition)

Burrows, L. 1980. *A Grammar of the Ho Language*. New Delhi: Cosmo Publications. (reprint)

Colby, B. N. 1985. Toward an Encyclopedic Ethnography for Use in `Intelligent' Computer

---

[4] In Oriya, /NN/ is pronounced and heard as /nn/. For this reason /taNNi/ has become /ta:ni/, not */ta:Ni/, in this language.

[5] Prof. R. C. Pradhan, my colleague in the Department of Philosophy at the University of Hyderabad, tells me that this word is used in Western Orissa even today.

[6] For a discussion on the other origins of Jagannatha, viz. Buddhist, Brahmanical, and Jaina see Mishra (1995).

Programs. In: *Directions in Cognitive Anthropology*, ed. by J.W.D. Dougherty. Urbana: University of Illinois Press.
Dalton, E. T. 1978. *Tribal History of Eastern India.* New Delhi: Cosmo Publications. (reprint)
Das, Nilakantha. 1935. *oRia: sa:hityara kramapariNa:ma, Part-II* (in Oriya: Chronology of Oriya Literature, Part-II). Cuttack: Nababharata Granthalaya.
Dasa, Sarala. 1965-73. *sa:raLa: maha:bha:rata* (in Oriya: Sarala's Mahabharata), ed. by Arttaballabha Mohanty. Bhubaneswar: Department of Cultural Affairs, Govt. of Orissa.
Eschmann, A., H. Kulke, G. C. Tripathi (eds.) 1978. *The Cult of Jagannatha and the Regional Tradition of Orissa.* New Delhi: Manohar.
Frazer, J. G. 1986. *Marriage and Worship in Early Societies: A Treatise in Totemism and Exogamy, Vol.II.* Delhi: Mittal Publications. (reprint)
Ganguly, D. K. 1975. *Historical Geography and Dynastic History of Orissa upto the Rise of the Imperial Gangas.* Calcutta: Punthi Pustak.
Goswami, K. 1982. The Cult. In: *Krishna: the Divine Lover (Myth and Legend through Indian Art).* New Delhi: B. I. Publications.
Hodson, T. C. 1974. *The Naga Tribes of Manipur.* Delhi: B. R. Publishing Corporation. (reprint)
Hoffman, J. (ed. in collaboration with Arthur van Emelen). 1990. *Encyclopaedia Mundarica.* New Delhi: Gian Publishing House. (reprint)
Karve, Irawati 1965. *Kinship Organisation in India.* Bombay: Asia Publishing House. (reprint)
Kay, P. 1977. Language Evolution and Speech Style. In: *Sociocultural Dimensions of Language Change*, ed. by B. Blount & M. Sanches. New York: Academic Press.
Keesing, R. 1979. Linguistic Knowledge and Cultural Knowledge. *American Anthropologist* 81:14-36.
Kroeber, A. L. 1967. *Anthropology.* New Delhi: Oxford & IBH Publishing Co.
Kulke, H. 1978a. Early Royal Patronage of the Jagannatha Cult. In: Eschmann, Kulke & Tripathi (eds.)
Kulke, H. 1978b. Royal Temple Policy and the Structure of Medieval Hindu Kingdoms. In: Eschmann, Kulke & Tripathi (eds.)
Levi, S., J. Przyluski, and J. Bloch 1975. *Pre-Aryan and Pre-Dravidian in India.* Calcutta: University of Calcutta.
Masica, C. P. 1976. *Defining a Linguistic Area: South Asia.* Chicago & London: University of Chicago Press.
Mishra, Baba 1995. *Medieval Orissa and Cult of Jagannath.* New Delhi: Navrang.
Mohanty, Arttaballabha (ed.) 1940. *ma:daLa:pa:nji* (in Oriya: The Temple Chronicle). Cuttack: Prachi Samiti.
Mohanty, Panchanan 1997a. Loss of /o/ Kui, Sora, and Oriya: A Clue for a Sublinguistic Area. In: *Languages of Tribal and Indigenous Peoples of India: The Ethnic Space*, ed. by Anvita Abbi. Delhi: Motilal Banarsidass.
Mohanty, Panchanan 1997b. Gender Agreement in Oriya: Dravidian or Munda? Paper presented at the Silver Jubilee Conference of Dravidian Linguistics Association at Chennai, June 17 -21, 1997.
Mohapatra, S. C. 1994. *purusottama jaganna:tha* (in Oriya: The Best Man Jagannatha). Puri: Sri Jagannatha Gabeshana Kendra.
Nagaraja, K. S. 1999. *Korku Language : Grammar, Texts, and Vocabulary.* Tokyo: Tokyo University of Foreign Studies.
Panigrahi, K. C. 1986. *History of Orissa (Hindu Period).* Cuttack: Kitab Mahal. (reprint)
Patnaik, N. 1977. *Cultural Tradition of Puri.* Simla: Indian Institute of Advanced Study.
Rajaguru, S. N. 1968. *History of the Gangas, Part-I.* Bhubaneswar: State Museum, Orissa.
Rajaguru, S. N. 1972. *History of the Gangas, Part-II.* Bhubaneswar: State Museum, Orissa.
Ramamurti, G. V. 1931. *A Manual of the So:ra: (or Savara) Language.* Madras: Govt. Press.
Ramamurti, G. V. 1986. *Sora-English Dictionary.* Delhi: Mittal Publications. (reprint)

Sahu, J. K. 1996. *nabakaLebara o jaganna:tha dharmara aitiha:sika prusThabhumi* (in Oriya: Newbody and the Historical Background of Jagannatha Religion). Cuttack: Cuttack Trading Company.

Sapir, E. 1979. *Language: An Introduction to the Study of Speech.* London: Granada. (reprint)

Silverstein, M. 1985. The Functional Stratification of Language and Ontogenesis. In: *Culture, Communication, and Cognition: Vygotskian Perspective*, ed. by J.V. Wertsch. Cambridge: Cambridge University Press.

Singh, Upinder 1993. *Kings, Brahmanas and Temples in Orissa: An Epigraphic Study A.D. 300 -1147.* New Delhi: Munshiram Manoharlal.

Tyler, S. A. 1978. *The Said and the Unsaid.* New York: Academic Press.

von Stietencron, H. 1978. Early Temples of Jagannatha in Orissa: The Formative Phase. In: Eschmann, Kulke & Tripathi (eds.)

Whorf, B. L. 1956. *Language, Thought, and Reality.* Cambridge, Mass: MIT Press.

Tracing the Ancestral Kinship System: The Global Etymon KAKA

Part I: a linguistic study

Pierre J. Bancel and Alain Matthey de l'Etang*

In memory of
Joseph H. Greenberg.

Abstract: The worldwide kinship etymology KAKA was first presented by Ruhlen (1994*a*, 2000*a*) with the meaning of 'elder brother, uncle' on the basis of essentially Eurasian, Oceanic, and American data. It is here extended to Africa, to Australia and to several other language families from the previous areas. The wide geographical distribution of this etymology, together with the striking phonetic and semantic consistency of its numerous cognates, entails several important consequences for both linguistics and social anthropology. In linguistics, the etymological series of KAKA is clearly compatible only with a unique origin of most, or all, extant human languages (Bengtson & Ruhlen 1994, Ruhlen 1994*a*). Uncovering a core part of *Homo sapiens'* kinship system at the crucial time of the Great Dispersal (*ca.* 100,000 BP ~ 40,000 BP) would obviously have tremendous consequences for our knowledge of the prehistory of human social organization.

1. PRESENTATION

The first publication of two worldwide kinship etyma, namely KAKA 'uncle, elder brother' (Ruhlen 1994*a*, 2000*a*) and AJA 'elder sister, aunt, grandmother, mother' (Bengtson and Ruhlen 1994, Ruhlen 2000*a*) could entail important anthropological consequences [1]. As a matter of fact, finding kinship terms in the lexicon of the Proto-Human language, ancestral to all extant or attested human languages, raises a crucial question: to what kinship terminological system would these terms have belonged?

The very idea of an ancestral kinship system runs counter to the admitted opinion of most anthropologists. For instance, while reviewing *Transformations of Kinship* (Godelier, Trautmann & Tjon Sie Fat 1998), the proceedings of an important round table on Dravidian, Iroquois, and Crow-Omaha kinship systems, Jamard (2000) states that *"the monogenesis of terminological systems is doubtful for some and ruled out for others."*

As a consequence of this scepticism, and of the parallel aversion to deep linguistic comparison that prevails among many historical linguists, comparative studies of kinship terms and systems have, until now, been limited to linguistic families of low or middle antiquity, such as Siouan (Matthews 1959), Indo-European (Wordick 1970), Dravidian (Trautmann 1981), etc. These studies have nevertheless proven fruitful, leading to the reconstruction of original terms and, as a second step,

---

* Association d'Etudes linguistiques et anthropologiques préhistoriques (Paris, France), Santa Fe Institute (Santa Fe, New Mexico), and Skidmore College (Saratoga Springs, New York).

1 Earlier versions of this paper have greatly benefited from discussions withMerritt Ruhlen, John D. Bengtson and Mary Ellen Lepionka. They may of course not be held responsible for possible errors.

to the determination of the ancestral system in these families.

Multilateral linguistic comparison, as elaborated most notably by Greenberg (1987: 1-37, 1995, etc.), Bengtson and Ruhlen (1994: 277-292) and Ruhlen (1994*a passim*, 2000*b*), is, however, able to reach much greater time depths. It gives us the practical possibility to recover some kinship global etyma belonging to the corresponding kinship system of the Proto-Human language. Their validity will crucially depend on the abundance and the degree of convergence of the data, as well as on their geographical distribution and on the number of linguistic families involved in the etymological series.

Applying to Proto-Human kinship etyma the methods of social anthropology developed in the twentieth century implies fulfilling another crucial condition: namely, to define precisely the kin position(s) referred to by the etymon covering each series. The semantic convergence of the series will be of particular importance here.

This application makes possible and necessary a worldwide comparison of vernacular kinship terminologies, with the ultimate goal of uncovering the terminology and architecture of our ancestor *Homo sapiens*' kinship system. Such a system would date at least from the Great Dispersal that led our ancestors to settle the whole Old World (including New Guinea and Australia) between 100,000 BP and 40,000 BP.

As a first step in this direction, we have undertaken a new study of the etymon KAKA[2], already established by Ruhlen on a broad, though not exactly worldwide, geolinguistic basis. We went through a considerable (though still far from exhaustive) quantity of anthropological and linguistic works describing kinship terminologies used by peoples all over the world. We thus obtained a new series of data, adding to Ruhlen's initial data or in some cases superseding them (all are reproduced in the Appendix).

In this Part I of our study, we present the set of data and discuss the intrinsic etymological validity of the KAKA series. Part II (Matthey de l'Etang & Bancel, this volume) will deal with these data from the anthropological viewpoint.

2. METHODS

2.1. BUILDING A LEXICAL SERIES

Multilateral comparison has had until now an almost unique goal: classifying languages of the world into genetic families. This will not be our aim here. However, we will make use of an inherent property of the method, namely to produce valid etyma of extremely old age independent of the complete reconstitution of the phonetic history of the linguistic family concerned. Thus, we will try to obtain, through a lexical comparison within the kinship field at the global level, a valid Proto-Human etymology.

We are lucky that the rough material for this study is available in abundant quantities in libraries. From the end of the nineteenth century on, a classical exercise for every field anthropologist has been to describe the kinship system of the people under investigation — often with a transcription of the vernacular terms. We thus looked for kin terms, referring to any position(s) with regard to ego, which would be phonetically likely reflexes of the etymon KAKA given by Ruhlen (1994*a*).

---

2. We will regularly label in SMALL CAPITALS the etyma obtained through a recurrent phonetic and semantic correspondence in a unique word series, in order to differentiate them from standard reconstructions (traditionally preceded by an *asterisk and written in *lowercase italics*), which derive from recurring phonemic correspondences in several word or morpheme series.

2.1.1. Building a semantic series

The conditions of sexed reproduction determine a double (ascending and descending) kinship position tree centered on ego. In this tree, each position may be described as a chain of elementary positions (mother M, father F, son S, daughter D, brother B, sister Z, wife W, husband H), themselves defined by a handful of features (male/female, consanguineal/affinal, generation + / = / –) to which may be added, mostly for ego's closest kin, the feature older/younger in the same generation[3]. Typically, a given vernacular terminology does not use a different term to designate each position. Rather, a few dozen reference and address terms designate as many as about two hundred relationships (the rough total of closest kin, beyond which people are no longer considered as belonging to one's kin significantly enough to bear a specific designation). Thus, many terms refer to several different positions; for instance, Miwok (Penutian branch of Amerind) *kaka* refers to the class of parents including mother's brother MB, mother's brother's son MBS, mother's brother's son's son MBSS, mother's brother's son's son's son MBSSS, etc.

One will also notice that not all the various positions referred to by a given term enjoy the same semantic status. In the case of Miwok *kaka*, the first meaning mentioned above (mother's brother MB) constitutes the primary or *"focal"* meaning — as Lounsbury (1964: 356) accurately termed it —, while the other meanings (mother's brother's son MBS, mother's brother's son's son MBSS, mother's brother's son's son's son MBSSS, etc.) are secondary or derived. To construct our etymology, we will deal mostly with the primary meanings of the terms.

These objective and structural facts make kinship a very tight semantic field. Thus, semantic stringency in selecting cognates is much easier to assess here than in other parts of the lexicon.

2.1.2. Building a phonetic series

We propose tentatively to classify the cognates that have been collected into an etymological series according to their contribution to the phonetic consistency of the series.

The first category contains terms reflecting all the phonemes of the etymon, either directly or in a slightly evolved shape (though we admit the loss of the final vowel). Here belong, for example, Proto-Australian KAKA 'mother's brother MB, (grandfather GdF),' Proto-Bantu **-kààká* 'grandparent GdPt' [most probably from Proto-Niger-Congo KAAKA 'grandfather GdF, (mother's brother MB)'], Tlingit *kak* 'mother's brother MB,' Vietnamese *kăw* 'mother's brother MB,' Proto-Indo-Hittite XAXX(A) 'mother's father MF, mother's brother MB, father's father FF,' Yukaghir *xa'xa* 'mother's brother MB, grandfather GdF,' and Proto-Austronesian **kaka* 'elder brother B+.'

The second category includes terms such as Proto-Semitic **ʔaχ* 'elder brother B+,' Proto-Altaic **āka* 'elder brother B+,' Proto-Eskimo **akka-k* 'father's brother FB,' Eyak *aqaq* 'mother's elder brother MB+,' Haida *qā* 'mother's brother MB,' or Hunza Burushaski *ŋgo* 'mother's brother MB.' These terms exhibit substantial changes, losses, or adjunctions but nevertheless remain at a small phonetic distance from the etymon and strongly contribute to the validity of the series, though not as massively as the first category reflexes do.

A third category contains even more differentiated terms. These may be reflexes of the etymon under consideration, but their phonemes show equivalent phonetic compatibility with other potential etyma. Words belonging to this category participate only marginally in setting up the etymon's shape and do not contribute much to its validity. Cognates such as Abelam (Indo-Pacific) *wau* 'mother's brother MB' or Classical Latin (Eurasiatic) *aw-us* 'grandfather GdF,' *aw-unkul-us* 'mother's brother MB' belong to this category. Both could derive from a range of pseudo-etyma such as *ʔBABA, ʔGABA, ʔBAGA,* etc., without marked complication of the phonetic derivative string.

---

3. Classical hyperonyms such as Sp (spouse = W or H), Ch (child = S or D), GdF (grandfather = FF or MF), GdM (grandmother = FM or MM) or GdPt (grandparent = GdF or GdM) will also be used here.

Nevertheless, these words are interesting. On the one hand, Latin *aw-us* belong to a family where clear reflexes of the etymon are widely attested, being part of a Proto-Indo-European etymology (Pokorný 1959, Wordick 1970) going back to Proto-Indo-Hittite $X^{w}AX^{w}(A)$. These Abelam or Latin cognate reinforces the series at the local level without major bearing on its distribution.

Finally, a fourth category contains terms that are semantically coherent with the rest of the series. Phonetically, a sub-string of its shape exhibits a strong similarity with the etymon, while the rest of the word is a possible result of affixation or composition. Many Australian words for 'mother's brother MB'—besides the numerous clear reflexes of KAKA mentioned in the Appendix—fall into this category, *e.g.* Aranda *gamonna* 'mother's brother MB.' We did not retain them in the series, though specialists in Australian languages might well show that they indeed belong to it.

2.2. THREE TESTS ON THE ETYMON *KAKA*

As explained above, we were working with an already identified etymon, trying to widen its geographical and genetic linguistic basis. This situation creates the conditions for a triple test.

Test 1. The rate of newly found cognates with regard to the number of investigated languages could (1) fall within the random convergence range, (2) largely exceed any reasonable random hypothesis or (3) fall into a middle range, leaving room for reasonable doubt. We do not give figures here to separate the three cases, because the statistical basis for it is lacking at the present time. Thus, we will have to rest on our subjective judgment to decide which cases are doubtlessly beyond or within random convergence. This has been customary for more than two centuries with regard to regular phonetic correspondences, which are rightly assumed to fall beyond any reasonable random convergence without a single probability calculation having ever been made. This surely does not deprive regular correspondences of reliability; impressionistic assessments only stretch the space for doubt, while a statistical calculation would shrink it.

Test 2. Ruhlen's data show a distribution mostly in Asia and the Americas. This fact could lead one to consider the etymon as belonging to a remote antiquity, though not necessarily to the Proto-Human heritage. Thus, in the case of a non-random answer to test 1, the geographic and genetic distribution of languages included in the series would also be of importance.

Test 3. We sought to identify in more or less exhaustive kinship term lists possible reflexes of KAKA on an essentially phonetic basis, without regard to the kin relationship(s) referred to by the terms. This left the door open to discovering phonetic "cognates" widely spread over the whole range of kinship positions, causing semantic derivation problems in which the observed phonetic convergence were not correlated with any particular kinship position(s). To explain this phenomenon would raise unexpected problems and would probably not be entirely, if at all, compatible with a common heritage, at least in the classical sense.

3. DISCUSSION

3.1. RESULTS OF THE TESTS

3.1.1. Statistical validity of the series (test 1)

The table given in the Appendix includes 531 reflexes[4] of KAKA in 495 languages or proto-

4. In a given language, forms differing only by the affixation or the composition— e.g. Bandi *kéɛ́ye* 'father F,' *kéɛ́ye walá* 'grandfather GdF,' or Bassa Nge *(ndá-)ákɔ* 'grandfather GdF,' *(nnó-)ókɔ* 'grandmother GdM' — are counted for just one. The total number of forms presented here is 653.

languages. Most of them (469, or 88.4 %) are first- (234, or 44.1 %) or second-category (235, or 44.2 %) reflexes. These phonetically highly coherent reflexes certainly make this one of the more robust global etymological series ever built.

We retained only a handful of third-category cognates (66, or 12.5 %) among numerous candidates (corresponding to the lower phonetic requirements for this category) in the two kinds of cases (respectively those of Latin and Abelam) described in section 2.2.

However, it would not be statistically valid to compare directly this total number of cognates with the total number of the languages we investigated. As a matter of fact, some of these cognates have been taken over from previous studies (such as Guthrie 1967-1971, or Ruhlen 1994*a*), in which the number of languages under investigation is unknown to us. Taking them into account on a one-to-one basis would clearly introduce a strong inflationary bias. Conversely, rating their number with regard to the total number of languages of the family they belong to (and at which level?) would assume that all the languages of this family have been investigated, certainly introducing a deflationary bias. Other cognates come from multilingual vocabulary lists giving only a subset of the kinship terminology. For instance, Koelle (1854) does not elicit in any form the crucial position of 'mother's brother MB,' while we know from other sources that at least some of the languages in his sample (*e.g.* Fula) have a cognate of KAKA for this position. Including the languages studied by Koelle in a general statistic would entail another deflationary bias.

Thus, some languages must be kept separate from our statistical approach. Practically, data from Ehret (1980), Guthrie (1967-1971), Koelle (1854), Ruhlen (1994) and Starostin's database *Tower of Babel* have been excluded from the counts below. In the remaining 328 languages, we identified 364 reflexes (instantiated in 455 forms) of KAKA. Compared with the some 700 languages we investigated, this amounts to nearly half the languages that had at least one reflex of KAKA. Given the time depth at which we are operating, such a rate of correlation is enormous. Is seems however quite coherent with the findings of Murdock (1957) concerning MAMA and PAPA.

Moreover, Koelle's data, while omitted from the general statistics, constitute a statistical test for the Niger-Congo family. His work describes 10 kin relationships covering 12 positions (father F, mother M, grandfather GdF [= FF and MF], grandmother GdM [= MM and FM], son S, daughter D, elder brother B+, elder sister Z+, younger brother B–, younger sister Z–) in 200 African languages, most of which belong to the Niger-Congo family. Of these 200 languages, 55 (27.5 %) have at least one reflex of KAKA. Among them, 52 languages have a reflex under the gloss 'grandfather GdF' (of which 37 attest the same reflex, identical or in composition/derivation, under the gloss 'grandmother GdM'); 6 languages have a reflex under the gloss 'elder brother B+,' 3 under the gloss 'father F,' and 2 under the gloss 'elder sister Z+.' However, as mentioned previously, Koelle did not elicit the terms for 'mother's brother MB' or for 'uncle.' But we know that at least some languages from his sample (*e.g.* Fula, Koelle's *"Pulóó"*) use the same reflex of KAKA to designate the mother's brother MB and the grandfather GdF. This leaves open the possibility that the basic 27.5 % figure of reflexes in Koelle's language sample would be significantly increased if we could add the data for the mother's brother MB from these languages.

These statistical facts make it extremely unlikely that the etymological series of KAKA is a case of coincidence.

3.1.2. Geolinguistical validity of the series (test 2)

Test 2 also receives a clear answer. The bulk of cognates is significantly spread over all the continents and over a number of language families.

Africa is widely represented by Niger-Congo, with cognates in Mande, West Atlantic and the large Central Niger-Congo branch. Data on Nilo-Saharan languages are somewhat scarcer; however, the presence of cognates in languages from four Nilo-Saharan primary branches (namely Songhai, Saharan, Central and Eastern Sudanic) clearly favors the original existence of KAKA in this phylum as

well. Afroasiatic is well represented as well, with Semitic, Chadic and Cushitic branches. Khoisan reflexes seem to be lacking, first of all because of the difficulty to compare the Khoisan clicks with consonants in other languages families.

Eurasia is represented by all branches of Eurasiatic (in the Greenbergian sense) but Chukotian (*i.e.* Indo-Hittite, Uralic-Yukaghir, Altaic, Korean-Japanese-Ainu, Gilyak, and Eskimo-Aleut), Semitic (see above), Burushaski, Sino-Tibetan, and Austric (with Yao, Mon-Khmer and Austronesian). In Dravidian, an AKKA form is attested with the two meanings of either 'maternal grandparent MF, MM' (Central Dravidian) or 'elder sister Z+' (Southern Dravidian); a handful of KAKA forms having been borrowed from Indo-Aryan, which most clearly appears from their common meaning of 'father's brother FB.'

America is represented by all twelve primary branches of Amerind, all of which attest numerous reflexes. In Na-Dene, each of the three most divergent languages (Haida, Tlingit and Eyak) attests one or two excellent reflexes, and if the Athabaskan branch, whose some 30 languages have been investigated, attests KAKA only sporadically and with feminine meanings, its presence at the Proto-Na-Dene stage seems secure. Together with Burushaski and Sino-Tibetan in Asia, this makes it quite likely that the Dene-Caucasian macro-family had the word, even in its apparent absence from the three other branches, namely Basque, Yeniseian, and North Caucasian.

Australia is massively represented by Australian, with seven non-Pama-Nyungan and nine Pama-Nyungan branches, plus a number of unclassified languages from both sides.

Beyond the Austronesian languages spoken on its coasts, **New Guinea** is without doubt represented by the Indo-Pacific phylum[5]. Clear reflexes of KAKA are found in quite a range of Indo-Pacific subgroups. If Rai Coast languages such as Nganglau or Saep exhibit obvious borrowings from Austronesian, with the typical meaning of 'elder sibling of the same sex as ego,' the same being probably true for some languages of the Timor-Alor-Pantar group, languages from other groups attest clear reflexes with no possibility of having borrowed it from Austronesian, nor from any other language family.

Few groups give openly negative results. Kartvelian (4 languages) is almost the sole language family where we found absolutely no reflex. In the Indo-Iranian and Indo-Aryan branches of Indo-European, the numerous *kaaka* words for 'father's brother FB' must have been borrowed, replacing everywhere (except in Dardic) the Proto-Indo-European derivative of **pater* 'father F' (*e.g.* Sanskrit *pitroya* or Classical Latin *patruus* 'father's brother FB') which designated the father's brother FB. Both Indo-Iranian and Indo-Aryan have lost any reflex of Indo-Hittite XAXX(A) 'mother's brother MB', 'father's father FF', 'mother's father MF' before their respective Avestan and Sanskrit stages, and have replaced the 'mother's brother MB' with a MAMA-derived word (a rather rare, though not unique, fact). As we have seen above, the Athabaskan branch of Na-Dene (34 languages), exhaustively investigated, displays only four reflexes. In practically all the other language families, such as Indo-Pacific or Khoisan, the lack or the low number of identified reflexes express above all the scarcity of documentation and/or the difficulty to attain and interpret it.

This huge distribution covers at least four major continents (Africa, Eurasia, the Americas, and Australia) as well as eight to ten phyla (Niger-Congo, Nilo-Saharan, Eurasiatic, Dravidian, Dene-Caucasian, Amerind, Austric, and Australian, plus quite probably Afroasiatic and Indo-Pacific). Finally, the phyla contributing reflexes of KAKA at the stage of their proto-language represent a total of 3,500 to 4,500 languages out of the 5,000 to 6,000 known languages of the world: 1,032 Niger-Congo languages, 959 Austronesian languages, 583 Amerind languages, 258 Sino-Tibetan languages, 170 Australian languages, 138 Nilo-Saharan languages, 144 Indo-Hittite languages, 63 Altaic languages, 34 Na-Dene languages, 24 Uralic-Yukaghir languages, 19 Semitic languages, 9 Eskimo languages, 3 Yao languages, 1 Gilyak language and 1 Burushaski language, to which probably add

---

5. Warm thanks to Tim Usher for his Indo-Pacific and Australian data.

731 Indo-Pacific languages and 241 Afroasiatic languages (figures from Ruhlen 1991). Thus, two thirds to three quarters or more of all the human languages are concerned.

Consequently, KAKA is certainly one of the most widely illustrated global etymologies in both geographical areas and genetic diversity.

3.1.3. Semantic validity of the series (test 3)

We have already stated that the phonetic validity of the reflexes is close to the maximum, with almost nine out of ten cognates belonging to the two unambiguous categories 1 and 2 delineated above (section 2.1.2), half of them being direct or nearly direct category 1 reflexes. This derives partly from the fact that it was a primary criterion in the selection of data.

As regards the semantic validity, some scattering of the reflexes within the kinship field could be expected. The 328 languages of our statistical reference sample exhibit 455 possible reflexes of KAKA, distributed over more than thirty different kin types as diverse as the father F, the mother's brother MB, the cousin FBS-FZS-MBS-MZS, the father-in law HF-WF, the nephew BS-ZS, the elder sister Z+, the mother's brother's wife MBW, the grandchild GdCh, etc. Does this not look like a typical case of random spreading of the KAKA phonetic form over the whole kinship semantic field?

A look at Table 1 instantly shows that the reverse is in fact true. Of all these kin types, only 5 or 6 are significantly represented. The mother's brother MB (31,1 %) alone accounts for one third of the languages, and with the grandfather GdF (22,9 %) and the elder brother B + (21 %), we round up exactly three-quarters of the languages and over half the reflexes. Furthermore, these three positions are found in almost all the major geographical areas covered by the series (Africa, Eurasia, the Americas, and Australia), and in a large number of language families. It is crucial here to observe that these three meanings, to which one may add the father's brother FB, stand for a male elder direct consanguineal quite near to ego—with the remarkable exception of ego's father F.

MB	GdM	GdF	B+	Z +	FB	uncle	M	MZ	FZ	GdCh	Other Positions (< 5 each)
102	78	75	69	30	21	13	10	6	6	6	72
31,1	23,8	22,9	21,0	9,1	6,4	4,0	3,0	1,8	1,8	1,8	—

Table 1. Number and percentage of reflexes of KAKA for the main kin positions in our statistical reference sample of 455 cognates from 328 languages (percentages are calculated with regard to the number of languages).

An apparent exception is the high number of grandmother GdM represented in the sample. This results partly from the 26 grandparents GdPt which have been counted on the two positions of GdF and GdM (as the 7 elder siblings have been counted both as elder brothers B + and elder sisters Z +). Furthermore, as is most conspicuous in Koelle's (1854) data on Niger-Congo languages (not included in our statistical sample), using a reflex of KAKA to designate the grandparents GdPt, the meaning grandmother GdM is quite often secondary (as appears from their derived or compound form), while it never happens that the form for grandfather GdF is derived from grandmother GdM.

It is also noteworthy that three representative feminine positions, including the grandmother GdM plus the elder sister Z + and father's sister FZ, could represent a non-random minor subset of reflex meanings. They constitute the feminine mirror image of the three most widely represented masculine positions in the table (mother's brother MB, grandfather GdF, and elder brother B +). Although the father's sister FZ as such appears only six times in the reference sample, two more are mentioned by Ruhlen (1994*a*) and many of the 'aunts' appearing in this latter's data might stand for the father's sister FZ as well, according to the respective kinship system of the

concerned languages (the 'aunt' glosses might easily result from confusion or simplification made by the primary descriptors).

Consequently, the terms are not scattered all over the kinship semantic field. To the contrary, three positions, close to each other, account for a majority of the items collected. Also, the exclusion of 'father F' is a factor of consistency, considering the particular position of this kin type in ego's kinship system. This very close semantic coherence strongly contributes to the etymological validity of the series.

3.1.4. Conclusion

The results of the three tests for KAKA respectively lead to the following conclusions:

(1) In the languages under investigation the new cognates rate is very high.

(2) Their geolinguistic distribution is global.

(3) Their semantic consistency is compelling.

The conclusion is correspondingly unambiguous: we are faced with an etymological series at the global level. To explain its existence requires examination of the various competing hypotheses. In the next subsection, we will consider the three well-known conditions that may give rise to apparent etymological convergence in the absence of a common inheritance—namely chance, sound symbolism, and borrowing.

3.2. THE POSSIBLE EXPLANATIONS

3.2.1. Chance Resemblances

In test 1 above, we stated that no satisfying models had been built to calculate with precision the probability of random similarities between words. We have to rely on impressions, as has been the case for regular sound correspondences since the beginning of comparative linguistics more than two centuries ago. However, nobody questioned the reliability of regular sound correspondences on the grounds of hypothetical random convergence. Why? Because of the obvious unlikelihood of this possibility, resulting precisely from the dividing effect of recurrent convergences on the probability that these are due to chance.

In multilateral comparison, the degree of similarity and the number of presumed cognates constitute two other types of recurrence that should be taken into account when appreciating the validity of a particular etymon. Like regular phoneme correspondences, these recurrences mitigate the initial likelihood of a random event. Naturally, one has to take into account the number of languages where one has looked for similarities, but the more languages involved in a multilateral comparative series, the less likely it is that cognates are due to chance.

Is it conceivable that the parallel phonetic and semantic similarities between Proto-Bantu **-kààká* 'grandparent GdPt', ('mother's brother MB'), Proto-Semitic **ʔaχ* 'elder brother B+', Proto-Indo-Hittite $X^{W}AX^{W}A$ 'mother's brother MB', 'mother's father MF', 'father's father FF', Yukaghir *xa'xa* 'mother's brother MB', 'mother's father MF', 'father's father FF', Proto-Altaic **āka* 'elder brother B+', Proto-Eskimo **akka-k* 'father's brother FB', Vietnamese *kăw* 'mother's brother MB', Proto-Austronesian **kaka* 'elder brother B+', Burushaski *ŋgo* 'mother's brother MB', Haida *qā* 'mother's brother MB', Tlingit *kak* 'mother's brother MB', Eyak *aqaq* 'mother's elder brother MB+', Proto-Australian KAKA, 'mother's brother MB', ('grandfather GdF'), as well as all the other cognates listed in the Appendix, result from chance convergence? We think that the question answers itself.

3.2.2. Sound symbolism: Jakobson's hypothesis

Many linguists believe that the famous linguist Roman Jakobson had explained once and for all the world distribution of PAPA- and MAMA-like words by linking them to the early appearance, in babies' babbling, of [p] and [m] consonants (Jakobson 1960). According to him, the *"nursery words"* PAPA and MAMA would have resulted from spontaneous, convergent formations. This would explain their presence in many languages families from all over the world that were, in his time, allegedly unrelated. Jakobson, in the very first lines of his paper, axiomatically claims the unrelatedness[6] of the languages covered by the impressive "World Ethnographic Sample" of Murdock (1957), the collection of which he had encouraged along with Joseph H. Greenberg, and which he used as a starting basis for his hypothesis.

A careful reading of Jakobson's paper reveals, however, that he is far from committing himself as firmly as commonly thought. Admittedly he speaks of the *"nasal murmur"* as the only possible vocal emission for the suckling baby to justify the association between consonant [m] of MAMA and the breastfeeding mother. Nevertheless, he immediately points out that, in at least one observed case the word *papa* was learned before *mama*. Note that Jakobson uses the verb *"learn."* In no way does he claim that the child, with or without the help of his parents, had invented any of these kinship terms. In fact, Jakobson does not claim positively that a single case of such invention had been directly or indirectly documented; nor does he even claim that such an event should be considered as likely. He only shows how such an event *could* be explained, had it really happened. This is a reality that merely follows from Jakobson's assumption that languages of Murdock's sample are unrelated, a belief he shared with most linguists of his time[7].

Now, as far as we understand Jakobson's reasoning, taking his hypothesis seriously would imply that in every independent language group where we find apparent reflexes of PAPA and MAMA, a single human family had adopted as a permanent designation for the parents in relation with their child the first syllables uttered by their baby during the initial period of language acquisition. Further, it would imply that this designation had been preserved in their lineage, then extended to the neighbors, and finally generalized to all the speakers of the language.

Given the present extension of PAPA and MAMA, this process would have happened quite a number of times. Furthermore, the cases where these words had spread to all the speakers of a given language should be only a small proportion of the total number of times they had come into the world. In most cases, the term would have stayed confined to a family, a village, or a region, not to mention the many instances where the word would have survived for a couple of years within the family and then vanished, as do most *real* nursery words (in the sense of 'words forged or modified by a particular child during the early stages of the language acquisition process'), which are forgotten as the child grows.

Validating these intermediate stages of transmission, implicit in Jakobson's hypothesis, would suggest that the words *papa* 'father' and *mama* 'mother' spontaneously arise with almost every speech-endowed child. As a consequence, one would expect to find today, in many languages where the standard terms for 'father' (and 'dad') or 'mother' (and 'mum') are phonetically incompatible with the etymological series PAPA or MAMA, lots of *papa* and *mama* spontaneous formations at

---

6. This is a much stronger claim than the classical claim that some languagesmay not be shown to be related. Here, what one supposedly cannot demonstrate to be true — the relatedness of all languages — becomes self-evidently false. In fact, Jakobson does not even mention two languages or language groups he would consider independent from each other in Murdock's sample, just as if non-relatedness were an inherent collective property of human languages. Those whose relatedness had been successfully demonstrated thus become a rather meaningless exception to this non-relatedness general rule...

7. Given that languages exhibiting resemblances are unrelated, these resemblances must have another cause than common descent and thus do not demonstrate a common origin: unanswerable.

various degrees of generalization. To the best of our knowledge, the linguistic literature does not make mention of such facts. This raises more than a doubt about the general validity of the spontaneous generative theory.

Moreover, as observed by Ruhlen (1994*a*), the wide attestation of KAKA among the world languages constitutes another major problem for Jakobson's hypothesis, because consonant [k] is by no means an early-acquired phoneme.

There is another problem as well. The suckling infant's nasal murmur might account for a binary opposition between MAMA 'mother M' and PAPA 'father F' (even if, as we have said above, Jakobson himself did not go as far as to assert it overtly). In this hypothesis, the [m] is implicitly assigned to the 'mother M' by a Pavlovian conditioned response: through repeated co-occurrence, the vocal and auditory stimulus emitted by the infant would be mentally associated with the gustatory, olfactory, and tactile stimulus generated by breastfeeding. The non-nasal sound [p] corresponding to [m] would then be assigned by some kind of default rule to the non-breastfeeding relative corresponding to the 'mother M' in the family organization (i.e. the father F). This explanation fails as soon as the phoneme [k] of KAKA is added and a third relative, the 'mother's brother MB' and/or the 'elder brother B+'.

What kind of sound symbolism might explain why the 'mother's brother MB' and the 'elder brother B+' are represented in so many languages by consonant [k] and in almost none by [p], while the 'father F' is exactly in the reverse situation? If maternal breastfeeding may admittedly produce a correlation between the phonetic [nasal] and the semantic [maternal] features, it is difficult to find support for a correlation between the [labial] and [paternal] features as well as for the correlation between the [velar] and [avuncular / fraternal] features.

In a refined, two-tiered, structural version, the binary opposition between [m / n] – [maternal] and [p / t] – [paternal] could have generated an opposition between [nasal stop] – [feminine] and [non-nasal stop] – [masculine] on the one hand, while the fact that the four consonants [m n p t] designate direct ascendants had led to an opposition between [front stop] – [parental] and [back stop] – [collateral kinsperson]. Thus, the [k] of KAKA would intrinsically bear the semantic features [masculine] because of its non-nasality and [collateral kinsperson] because of its non-frontality.

Assuming that these oppositions are at work today or at least worked in historical times (which follows from the fact that they essentially discard the unity of origin hypothesis) would imply that the associations between phonemes and semantic features are extremely strong. Thus, one would certainly expect these phonemes to be used by many languages not only in the designation of the close kinship relationships, but also to designate things where the concerned semantic features are salient. In particular, in relation to the assumed most fundamental association between the nasality feature and the maternal breastfeeding, one would expect, in present-day languages which contrast genders in nouns, to find a nasal consonant (or a nasalized vowel) commonly associated with the feminine gender. Once again, this does not seem to be the case.

No doubt the congruence of Jakobson's hypothesis with the dogma of the obliteration of linguistic similarities prior to the Indo-European firewall (*i.e.* before 5,000 BP to 8,000 BP) was appealing to many linguists, because it accounted for two of the most conspicuous elements of the common world vocabulary[8]. And the acceptance of this proposal, without debate, by the linguistic

8. One will observe that PAPA and MAMA are more conspicuous than KAKA for a unique reason: they readily exist in the native languages of the linguists, *i.e.* mainly Romance or Germanic languages. Though KAKA is also present in these languages through the reflexes of Indo-Hittite $X^{W}AX^{W}A$, *e.g.* English *uncle*, German *Oheim* 'uncle,' *Opa* 'grandfather,' *Oma* 'grandmother,' Spanish *abuelo* 'grandfather,' French *oncle* 'uncle,' *aïeul* 'grandfather, ancestor' (> Latin *aviolus* 'little grandfather'), these forms are so opaquely modified by the (regular) phonetic evolution that no linguist before Joseph H. Greenberg (personal communication) and

community, in spite of quite obvious defects in Jakobson's treatment of Murdock's data, did in fact bury any attempt of a historical comparison of kinship terms until Ruhlen, thirty years later, happily questioned it.

In light of the preceding discussion, there seems little doubt that Jakobson's hypothesis was indeed hardly a hypothesis, but rather some kind of informed speculation [9]; that its relevance to PAPA and MAMA, his declared objects, is certainly very relative and simply groundless as far as KAKA is concerned.

We would not deny, however, that these three words (and some other ones) display a particular phonetic structure, as well as quite interesting semantic and pragmatic peculiarities. We will return to this subject in the final section 4. In any event, nothing in these phonetic, semantic, and pragmatic characteristics explains the two world convergences PAPA 'father F' and KAKA 'mother's brother MB', 'elder brother B+', 'grandfather GdF' on the basis of two symbolic associations between these respective kin relationships and consonants [p] and [k].

3.2.3. Borrowing and diffusion

In linguistics, diffusion refers to the process resulting in so-called areal features, common to languages belonging to different families for which such features are not otherwise widespread, such as the presence of vowel [y] in Breton, French, German, and Hungarian. Such features are supposed to have spread from the bulk of languages already having it to new ones by the simple strength of vicinity and the linguistic exchanges that may result from contacts between neighboring speakers. We will not defend here any particular opinion about areal features and their diffusion. Anyway, it must be borne in mind that these features are different in nature from words, so that their possible diffusion may not be simply extended to these latter.

Borrowing, to the contrary, is the process by which a language acquires a new word from another one. Sometimes a word may be borrowed several times, and travel quite a long way from its linguistic origin. This is well known for cultural terms referring to particularly attractive goods such as alcohol, tobacco, or television: the words then travel with the object referred to. However, in this process, any new language borrowing a word borrows it from another particular language—not from several ones. One may quite clearly illustrate this point with English, which borrowed several thousand words from French—not from Romance languages, and even less from Western European languages.

What is the import of this distinction between borrowing and diffusion on our present discussion? If words are, as it seems to be the case, borrowed from one language into another, it may be for a specific reason such as for the traveling goods and their names; or by chance (*i.e.* for an unknown reason, pertaining to individuals and circumstances). Any word may be borrowed from one language into another, though basic vocabulary is much less subject to borrowing than other words or morphemes. However, a word borrowed by chance is not very likely to be borrowed a second time—from either of the first two languages—by a third language; obviously, the probability that the same word was borrowed a third time by a fourth language is still much lower, etc.

Merritt Ruhlen (1994) had the idea to link the KAKA words into a widespread comparative series. Who said ethnocentrism?

9. While Murdock's "World Ethnographic Sample" covered more than 500 languages, Jakobson quotes in his whole paper linguistic facts from only two languages, which were moreover personally quite familiar to him: Russian (his maternal tongue) and Bulgarian (pretty close to the former). This famous paper was written for a volume in homage to Heinz Werner, a psychologist who has today passed somewhat into oblivion. It seems as though Jakobson had taken the nice and well-documented data compiled by Murdock as an excuse to rid himself—astutely and brilliantly, indeed—of a chore he had probably been asked to perform hundreds of times.

This leads to an antagonistic contradiction between chance borrowing and language splitting: the more independent languages or language families exhibiting the same word, the less likely it is that they borrowed it from one another. In the case of global etymologies, and particularly in the case of KAKA, well attested as it is in several mega-phyla, this contradiction reaches its maximum. Then, how many independent language families would have borrowed this word from one another? Would it have been the several dozen low-level language families where this word is found? This is completely impossible—geographically, semantically, and statistically. Would it then have been the round half-dozen of mega-phyla where KAKA is today securely attested? Even this would be very unlikely. Perhaps one of the two primary branches of the Proto-Human family could have borrowed it from the other branch? If these branches were identifiable, this could be possible, though not the most probable explanation compared with common inheritance from the Proto-Human language.

One may further observe that, in the case of global etyma, areal diffusion is almost as unlikely as borrowing. It forces one to suppose that independent languages sharing the considered feature (or word, for that matter) were once joined into an area, *i.e.* were spoken close enough to one another to circulate this feature. Clearly, the several dozen low-level families for which KAKA is documented do not constitute a geographical area in the Paleolithic conditions of communication. If it were claimed that the Proto-Australian, Proto-Amerind, Proto-Niger-Congo, Proto-Eurasiatic, Proto-Austric, Proto-Dene-Caucasian (as well as, probably, Proto-Afroasiatic and Proto-Nilo-Saharan) speakers might once have lived close enough to each other to have exchanged such words as KAKA (and many others), the result would not be very different from what we are advocating here. However, it must be insisted here that such process of word diffusion, just like the alleged common invention by babies of MAMA-, PAPA-, or KAKA-words, is unknown in real languages.

Thus, neither borrowing nor diffusion may constitute a satisfactory explanation to the lexical series of KAKA.

3.3. CONCLUSION

None of the three considered factors is an acceptable explanation for the similarities among the data presented here. Thus, the only explanation left is common origin. The etymon KAKA must have been an element in the lexicon of a proto-language ancestral to all languages and language families covered in the Appendix—as well as many others, most probably. The worldwide scattering of these data dates this proto-language back to a major event in the prehistory of *Homo sapiens,* that we propose to call the Great Dispersal, which was *Homo sapiens'* first big expansion over the surface of the Earth (though not the first world expansion of a hominid). According to archaeological evidence, this expansion would have taken place between 100,000 BP and 40,000 BP, a date which seems compatible with the demographic bottleneck recently found by genetic means around 60,000 BP.

The only available general linguistic framework with which these data seem to be consistent is the unity of origin of all the world's languages advocated by Bengtson and Ruhlen (1994)—a framework into which Ruhlen (1994*a*) had initially started to build the etymon KAKA, and that finds here strong confirmation.

4. PERSPECTIVES

Such firm construction of a global etymon indicates the existence of a global mother tongue as old as 50,000 years or more. As new global lexical series are added to those already published, and

are refined and reinforced, the Proto-Human hypothesis will gradually become accepted.

Besides the anthropological insight into the kinship system of our ancestors at the time of the Great Dispersal, which we will address in the second part of this study (Matthey de L'Etang & Bancel, this volume), KAKA and the other kinship nursery words—such as MAMA, AJA, PAPA, NANA or TATA—have a linguistic interest of their own. The childlike properties of these words, often invoked to discard the common origin hypothesis, have been misinterpreted.

In section 3.2.3 above, we identified specific properties of several of their fundamental aspects—phonetic, semantic, and pragmatic. Phonetically, each nursery word relies on a single basic consonant (a plain oral [p t k] or nasal [m n] stop without any articulatory complication). Furthermore, all the nursery words use the same vowel [a], which may be regarded as a good candidate for the most basic vowel; its location at the apex of the vowel triangle maximizes its distinctiveness, while it is produced with minimal tension of the articulatory organs. The CV syllable made of one of these consonants plus vowel [a] is, in turn, the simplest of the compound syllables (another is the VC syllable, which is, however, commonly used in only a small proportion of languages). The word results from reduplication of this CV syllable. The salient property in this description is *simplicity*. Simplicity of consonants, simplicity of vowel, simplicity of syllable, simplicity of reduplication: the phonetic design of the kinship nursery words seems to conspire to avoid complexity.

This phonetic simplicity is, of course, one of the main reasons that these words were assigned to child language. However, if it is not the children who invent these words each time one of them learns an articulated human language—an idea we rejected in section 3.2.2 above—another childhood may have seen these words come to light: that of articulated language itself, or more exactly the stage corresponding to the invention of oral lexicon (that of syntax evidently being later). This stage of human language evolution naturally inaugurated a phase of rational exploitation of human articulatory abilities, and certainly began by using the simplest phonemes and syllabic structures—exactly what we are faced with here.

Semantically, many factors—sociological, psychological, or pertaining to survival and reproductive effectiveness—also make kin terms excellent candidates to have been among the first lexically individuated items.

At the pragmatic level, it is noteworthy that the appellative nature of many of these words (though the distinction between appellative and reference terms is frequently neglected by the descriptors) makes them particular linguistic objects, sharing several similarities with proper nouns. A range of syntactic properties shared synchronically by the appellative kin terms and proper nouns confirms this peculiarity. This limits the level of cognitive abstraction for an individual to associate a sound sequence with a class of objects (only his close kin is concerned); this may have been another factor favoring the emergence of articulated language.

One will notice that, according to this conjecture, ontogenesis of language in the human nursling would at least partly mimic its phylogenesis in the species—another point where language evolution would parallel biological evolution.

That a Proto-Human language may be as old as 50,000 BP makes the preservation of kinship nursery terms striking. The transmission of MAMA, PAPA, and KAKA with little change over 100,000 to 200,000 years to modern languages disrupts our notions of the possible duration of human collective memory. We would then have to consider why some parts of language resist change much better than others. Most probably, the massive daily repetition of the kinship terms during childhood and youth, as well as the heavy affective investment of the speakers toward the persons referred to by these terms, should account for a good part of this resistance.

Although this idea is at present largely conjectural, the convergent elements above do not seem deprived of any strength. According to this conjecture, the words MAMA, PAPA, KAKA and some others would date from an unknown antiquity, though certainly much older than the Great Dispersal

of *Homo sapiens* and probably to be counted in hundreds rather than dozens of millennia. The linguistic means presently at our disposal do not permit us to judge this conjecture, which represents an unprecedented challenge for the linguistic community.

REFERENCES

BENGTSON John D. & Merritt RUHLEN. 1994. "Global Etymologies," *in* RUHLEN 1994b.

GODELIER Maurice, Thomas R. TRAUTMANN & Franklin E. TJON SIE FAT. 1998. *Transformations of Kinship.* Washington: Smithsonian Institution Press.

GREENBERG Joseph H. 1987. *Language in the Americas.* Stanford: Stanford University Press.

GREENBERG Joseph H. 1995. "The Concept of Proof in Genetic Linguistics," *Mother Tongue* I, 207-216, Charleston.

JAKOBSON Roman. [1960. "Why Mama and Papa?," *in Perspectives in Psychological Theory, Essays in Honor of Heinz Werner.* New York.] French translation 1969. "Pourquoi papa et maman?," *in* Roman JAKOBSON, *Langage enfantin et Aphasie.* Paris: Minuit.

JAMARD Jean-Luc. 2000. "La Passion de la parenté. Derniers échos ou retour de flamme?," *L'Homme* CLIV-CLV, 733-748, Paris.

KOELLE Sigismund. 1854. *Polyglotta Africana.* London: Church Missionary House.

LOCKWOOD David G., Peter H. FRIES et James E. COPELAND (eds). 2000. *Functional Approaches to Language, Culture and Cognition.* John Benjamins :Amsterdam-Philadelphia.

MATTHEY DE L'ETANG Alain & Pierre J. BANCEL. This volume. *Tracing the Ancestral Kinship System: The Etymon KAKA. Part II: An Anthropological Study.*

MURDOCK George P. 1957. "World Ethnographic Sample," *American Anthropologist* LIX, 664-687.

POKORNÝ Julius. 1959. *Indogermanisches etymologisches Wörterbuch.* Bern.

RENFREW Colin (ed.). 2000. *America Past, America Present : Genes and Languages in the Americas and Beyond.* Cambridge (Engl.) : The McDonald Institute for Archaeological Research.

RUHLEN Merritt. 1991. *A Guide to the World's Languages,* vol. I: *Classification.* Stanford: Stanford University Press.

RUHLEN Merritt. 1994*a*. *The Origin of Language. Tracing the Evolution of the Mother Tongue.* New York: John Wiley.

RUHLEN Merritt. 1994*b*. *On the Origin of Languages. Studies in Linguistic Taxonomy.* Stanford: Stanford University Press.

RUHLEN Merritt. 2000*a*. "Why KAKA and AYA?," *in* LOCKWOOD, FRIES & COPELAND 2000.

RUHLEN Merritt. 2000*b*. "Some Unanswered Linguistic Questions," *in* RENFREW 2000.

TRAUTMANN Thomas R. 1981. *Dravidian Kinship.* Cambridge (Engl.), New York: Cambridge University Press.

WORDICK Frank J. F. 1970. *A Generative-Extensionist Analysis of the Proto-Indo-European Kinship System With a Phonological and Semantic Reconstruction of the Terms.* Ph.D. thesis, Ann Arbor (Michigan).

Appendix

The etymological series KAKA

'mother's brother, grandfather, elder brother'

The table below gives the list of the likely reflexes of KAKA in four columns: MB (mother's brother), B+ (elder brother), GdF / GdM / GdPt (grandfather, grandmother, grandparent), Others. The linguistic classification followed here is that of Ruhlen (1991); only partial subclassification is given. The forelast column gives our assessment of each reflex according to the categories described in section 2.2. The references of the reflexes given in the last column are listed at the end of the table.

LANGUAGES	MB	B+	GdF / GdM / GdPt	Others	Cat.	References
NIGER-CONGO						
Mande						
Bandi (Gbándi)			*kééye walá* GdF	*kééye* F	1	Koelle[1]
Loko (Lándooɣo)			*gééye* GdF, F		1	*d°*
Loma (Tóóma)			*kééke* GdF		1	*d°*
West Atlantic						
Fula (Púlɔɔ Sáálum)	*kàwó*		*kau* GdF, MB		2	Ferry / Koelle
Nalu (Nálu)			*mááŋkɛrɛ* GdF		2	*d°*
Central Niger-Congo						
Nth Centr. Niger-Congo						
Proto-Gbaya			*kòò* GdF	*bé-kòò* GdCh	2	Moñino
Gbaya Toongo	*kàò* (borrowed from Fula?)		*kòò* GdF, GdM	*bé-kòò* GdCh	2	*d°*
Gbaya Lai	*kàò* (id.)		*kòkó* GdF, GdM	*ké-kòkó* GdCh	2/1	*d°*
Gbaya Kara Bodoe			*kòò* GdF, GdM	*bé-kòò* GdCh	2	*d°*
Gbeya Bo?oro	*?áù* (id.)		*kò* GdF	*bé-kòrò* GdCh	2	*d°*
Gbaya Mbodomo	*kàò* (id.)					*d°*
Bofi			*kà?à* GdF		2	*d°*

1. The languages quoted in Koelle (1854) have been identified with the help of the studies on the *Polyglotta africana* gathered in the *Sierra Leone Language Review* III (1964) and IV (1965), which are summarized in Dalby (1964). The glossonyms given by Koelle's informants are between parentheses. Koelle's transcription has been transposed as closely as possible to IPA. It must however be remarked that his acute accent (which he describes as transcribing a phonetic stress) must obviously have noted a high tone, the specific notation (and indeed the very notion) of which was unknown in the middle of the XIXth century. We reproduce here this accent as in the original.

Ngbaka-Manza	*àú* (id.)				3	Pers. notes
Manza	*àú* (id.)				3	*d°*
Sth Centr. Niger-Congo						
Logba (Léégba)				*kɔ́yo* Z+	1	Koelle
Ebe (Ébɛɛ)			*(nyá-)χɔɔ* GdF *kɔ́kɔɔ* GdM		2/1	*d°*
Nupe (Núúpɛ)			*(ndá-)kɔ* GdF *(nná-)kɔ* GdM		2	*d°*
Gwari (Púúka)			*(ndá-)kɔɔhé* GdF *(iiya-)kɔɔhé* GdM		2	*d°*
Idoma (Yála)			*(aad-)óóku* GdF *(oo-)kóóku* GdM		2/1	*d°*
Boritsũ (Bóriitsu)			*ony-óókɔw* GdF *ényɛn-óókɔw* GdM		2	*d°*
Bassa Nge? (Bása)			*(ndá-)ákɔ* GdF *(nnó-)ókɔ* GdM		2	*d°*
Kambari (Kámbaali)			*kááka* GdF, GdM		1	*d°*
Bassa-Kaduna (Bása)			*kááka* GdF, GdM		1	*d°*
Jaba (Haam)			*(dšéél-)kíkɛ* GdF	*kíkɛ* F	1	*d°*
Jarawa (Dsááraawa)			*kááya* GdF, GdM		1	*d°*
Nde (Ekámtuluufu)		*(mánaa nyóŋ-) kɔɔyɔ*	*ŋkíkuula(-ntá)* GdF *ŋkíkuula(-nná)* GdM		1/2	*d°*
Nde (Úúdɔm)		*(mɔɔánaa yóŋ-) kuuyu*			1	*d°*
Nde (Mbɔ́fɔɔn)		*(mɔɔánaa yóŋ-) kuuyu*			1	*d°*
Bate? (Bááyɔŋ)		*(mfúda) ŋgúkɔt*	*(táyaa) ŋgúkɔt* GdF	*(mfúda) ŋgúkɔt (méŋuua)* Z+	1	*d°*
?Cameroun [?Kom] (Kum)		*(mfɛ́ra) ŋguukɔt*	*(tá) ŋguukɔt* GdF *(má) ŋguukɔt* GdM		1	*d°*
Bali/Ngaaka (Báálu)		*(fíraa yi-) ŋguura* B+, Z+	*(titáá) ŋguura* GdF *(ninää) ŋguura* GdM		2	*d°*
Bamum (Bámɔm)			*(titáá yi-) ŋguura* GdF		2	*d°*
Bantu			**-kààká, *-kúúkù* GdPt		1	Guthrie
Kota (Undááza)			*kóógɔ* GdPt		1	Koelle
Njabi			*kaax* GdPt		1	Guthrie
Mbete (Buumbéte)			*ŋ-kááya* GdPt		1	Koelle
Northern Teke (Mbáámba)			*ŋ-kááka, ŋ-kááya* GdPt		1	*d°*
Ndzindziu			*ŋ-kao* GdPt		2	Guthrie
Boõ [Teke gr.] (Babúma)			*kääga* GdPt		1	Koelle
Bali			*ŋ-kaa* GdPt		2	Guthrie
Tsaayi [Teke group] (Nteyɛ)			*ŋ-kääga, ŋ-kääya* GdF, *ŋ-kääya butumääma* GdM		1	Koelle
Laali? [Teke gr.] (Mutsääya)			*kääka* GdPt		1	*d°*
Mfinu			*ŋ-kaoo* GdPt		2	Guthrie
Bobangi			*ŋ-kɔkɔ* GdPt		1	*d°*
Bolia			*ŋ-ka* GdPt		2	*d°*
Eastern Holoholo			*ŋgooko* GdPt		1	*d°*
Lega			*kuku-ne* MF, GdM		1	Bancel & Travaglino

Nyoro			*ń-kaaka* GdPt		1	Guthrie
Nyankore			*kaaka* my GdM		1	*d°*
Hanga			*kuuxu* GdPt		1	*d°*
Logoli			*gooko* GdPt		1	*d°*
Sukuma			*guukhu* GdPt		1	*d°*
Kaguru			*kuku* GdPt		1	*d°*
Unguja		*kaka*			1	*d°*
Kongo			*ŋ-kaaka* GdPt		1	*d°*
Kongo (Kabénda)			*kááka* GdF, *kááka mandšéénto* GdM		1	Koelle
Yombe (Nyómbɛ)			*kááka-ndɛ* GdF *kaaká-ma* my GdF *kaakáá-ku* thy GdF		1	*d°*
Sundi (Basúúnde)			*kááya* GdPt		2	*d°*
Northeastern Kongo (Musentáándu)			*kááka* GdF		1	*d°*
Central Kongo (Mimbóma)			*ŋ-kááka* GdF *ŋ-kááka mááma* GdM		1	*d°*
Kimbundu (Ndongo)			*kusu* GdPt		2	Guthrie
Sama (Kisááma)			*kúúkuéétu* GdF *kuukuétu -yamuhéétu* GdM		1	Koelle
Songo (Sóóngõ)			*kúúku* GdF *kúku-yamhéétu* GdM		1	*d°*
Mbangala (Kásaandš)			*kúúgu* GdPt		1	*d°*
Lwena			*kaka* GdPt		1	Guthrie
Ruund (Rúúnda)			*ŋáák* GdF		2	Koelle
Pende			*kaka* GdPt		1	Guthrie
Kanyoka (Kanyíika)			*kááka* GdPt		1	Koelle
Luba-Shaba (=Katanga)				*kaaka* Z+	1	Guthrie
Lunda			*ŋ-kaaka* GdPt		1	*d°*
Mambwe			*kuku* GdPt		1	*d°*
Lenje (Lenge)			*kokwana* GdF, MB		1	Seligman 1917
Tonga (Nyámbaan)			*kógwaan* GdPt		1	Koelle
Makua (Maatátaan)			*gwíía, gbúiga* GdF		2	*d°*
Umbundu (Paŋgééla)			*kóóku-ɔolu* GdF		1	*d°*
Umbundu (Nano)			*kuku* GdPt		1	Guthrie
Kwambi			*o-kuku* GdPt		1	*d°*
Lozi			*kuku* GdPt		1	Gluckman
Swazi			*gogo* GdPt		1	Kuper
Xhosa			*u-khokko* GdPt		1	Guthrie
Tswa			*koko* GdPt		1	*d°*
NILO-SAHARAN						
Songhai (Tumbúktu)			*káága-har* GdF *aikáága* my GdF		1	Koelle
Saharan						
Kanuri Kagama (Káánuri)			*kágaa kóóaŋga* GdF *kágaa kašígana* GdM		1	*d°*
Kanuri Manga (Múnioo)			*káya* GdPt		1	*d°*
Kanuri Nguru (Ngúruu)			*kááya* GdPt		1	*d°*
Kanuri Kanem (Káánem)			*kááya* GdF *kááya káámu* GdM		1	*d°*

East Sudanic						
Nilotic			**koko* GdPt		1	Seligman & Seligman
Western Nilotic						
Lango			*koko* GdF		1	*d°*
Dinka			*kokok* GdPt, MBW		1	*d°*
Shilluk			*kwa* GdF, FFB, HF		2	*d°*
Acholi			*kwaro* GdF	*la-kwaro* SS	2	Seligman & Sel.; Bancel & Trav.
Eastern Nilotic						
Bari				*ŋgogwo* WF, MBS	1	Seligman & Sel.
Southern Nilotic						
Pokot (= Suk)			*kugo* GdF		1	Péristiany
Central Sudanic						
Gula			*káá́* GdF (addr.) *káá́-pòì* GdM (addr.)		2	Pairault
AFROASIATIC						
Semitic		**ʔaχ*			2	Dolgopolsky
Berber						
Tamashek (Kándin)			*kááka* GdPt		1	Koelle
Chadic						
Hausa (Hóusa Káno)			*kááka* GdPt		1	*d°*
Hausa (Hóusa Kádziina)			*kááka* GdPt		1	*d°*
Bolewa (Píika)			*kááka* GdF		1	*d°*
Karekare (Karéékare)			*kááka* GdPt		1	*d°*
Bade? (Bode)			*ŋ-gáyɛ-gèmsi* GdF *ŋ-gáyɛ-gááma* GdM		1	*d°*
Ngizim? (Ŋgɔ́ɔ́dšin)			*kááka* GdPt		1	*d°*
Duwai (Dɔ́ɔ́ai)			*kááka* GdPt		1	*d°*
Kotoko			*kakāggene* GdF		1	Lebeuf
Cushitic						
Southern Cushitic			**koko-* GdM	**kwaʔam-* male relat.	1/2	Ehret
Maʔa			*kokó* GdM		1	*d°*
Asa			*koko* GdM		1	*d°*
Kwaʔaza				*kwaʔamuko* DH	2	*d°*
Burunge	*kwaʔamate*		*koko* GdF		2/1	*d°*
Eastern Cushitic			**akko* GdM		2	Haberland & Lamberti
Burji			*akko* GdM		2	*d°*
Gedeo			*akka'o* GdPt		2	*d°*
Arbore			*akka* GdM		2	*d°*
Bayso			*akko* GdM, GdCh		2	*d°*
Oromo			*akko'* GdM		2	*d°*
Gidole			*ako-ta* GdM		2	*d°*
Mossiya			*akoo-ta* GdM		2	*d°*
Konso			*aka* GdF *akkoyooa-ta* GdM		2	Haberland & Lamb.; Hallpike

EURASIATIC						
Indo-Hittite[2]			XAXX(A) GdF, MB		1	Bancel & Matthey
***Indo-European*$_1$**			**au̯-* elder, uncle		3	Pokorný
***Indo-European*$_2$**			**$H_a$ewyH_a-os* GdF, MB		2	Wordick
Latin	*aw-unkulus*		*aw-us* GdF *awi-a* GdM		3	Pokorný, Wordick
Armenian			*havu* GdF		3	*d°*
Gotic			*awo* GdM		3	*d°*
Old Norse			*afi* GdF		3	*d°*
Old Frisian			*ēm* GdF		3	*d°*
Old High German	*ōhaim* uncle				3	*d°*
German	*Oheim* uncle		*Opa* GdF, *Oma* GdM		3	*d°*
Breton	*eontr* uncle				3	*d°*
Welsh	*ewythr* uncle				3	*d°*
Old Cornish	*ewitor* uncle				3	*d°*
Old Irish				*(h)áue* nephew	3	*d°*
Middle Irish				*úa* nephew	3	*d°*
Lituanian	*avynas*				3	*d°*
Old Prussian	*awys* uncle				3	*d°*
Old Church Slavonic	*új'*				3	*d°*
Anatolian						
Hittite			*ḫuḫḫaś* GdF		1	*d°*
Lycian			*xuga* MF		1	*d°*
Altaic		**āka*			2	Ruhlen
Turkic						
Chuvash				*akka* Z+	2	Starostin
Old Turkish			*aqa* FF, F	*eke* Z+	2	*d°*
Turkish		*aga*			2	*d°*
Altai				*aka* FB–, cousin	2	Potapov & Levin
Yakut				*ahas* FZ+, *aha* F, elder	3	Jochelson 1933
Turkmen		*aaɢa*			2	Starostin
Tatar		*aga*			2	*d°*
Mongol		**aqa*			2	Ruhlen
Khalkha		*aha*		*egci* Z+	3/2	Vreeland; Aberle
Chahar		*aha*		*egci* Z+	3/2	Vreeland
Dagor		*aha*		*egci* Z+	3/2	*d°*
Kalmuk		*aha*		*ekci* Z+, *gagaa* FZ	3/2	Vreeland; Aberle
Mongur		*aɢa*			2	Starostin
Buriat		*aka*	*akha* the elders		2	Shirokog^{ff} 1929
Tungus		**akā* B			2	Ruhlen
Manchu			*age?, agee* senior	*kugu* FZ	2/1	Shirokog^{ff} 1924; Starostin
Birarčen		*aki, aka*		*ačka* FB	2	Shirokog^{ff} 1929

2. We give here two "standard" Proto-Indo-European reconstructions (among others): **au̯-* 'elder, uncle' (Pokorný 1959) and **$H_a$ewyH_a-os* 'mother's father, father's father, mother's brother, etc.' (Wordick 1970). However based on the same data, these reconstructions display at first glance quite serious phonetic and semantic differences, nor may either of them account satisfyingly for the common origin of these data. To remedy to some extent the defects of these reconstructions, we propose here an Indo-Hittite phonetic label XAXX(A) 'mother's father, father's father, mother's brother,' taking into account the Anatolian data (Hittite and Lycian), which display in C_1 and C_2 velar or uvular consonants. As noted by Wordick (1970), the PIE "laryngeal" **H_a* could well stand for the labiovelarized velar fricative [x^w].

Reindeer Tungus			*aki, aka* senior in ego's clan	*oki* Z+	2	*d°*
Negidal		*aki, aka*		*ɛka* Z+	2	Greenberg 2000
Evenki		*akin, aka*			2	Starostin
Even		*aqa*			2	*d°*
Solon		*axa, axin*			2	*d°*
Zhurzhen		*axun*			2	*d°*
Ulcha		*aɢa*			2	*d°*
Oroch		*aka, akin*			2	*d°*
Orok		*aɢa, aqa*			2	*d°*
Udighe		*ag'a*			2	*d°*
Uralic-Yukaghir						
Proto-Uralic	**ćečä*		**ekä* FF, FB+		3/2	Szíj
Ostiak				*iki* H, stepfather, elder	2	Smirnov, Steinitz
Vogul				*aki* FB+	2	Ahlqvist
Votiak				*aka* aunt, Z+	2	Smirnov
Mordvin				*akaj* aunt, niece, Z+, elder female relative	2	*d°*
Mokche				*akaj* aunt, Z+	2	*d°*
Cheremys	*čüčü*			*aka* FZ–, Z+	3/2	Szíj / Smirnov
Lapp			*ak'ko* GdM, *ak'kot* GdCh	*akke* father's older male parent in his generation	2	Goodenough
Yukaghir						
Kolyma Yukaghir		*a'ka*	*xa'xa* GdF, MB		2/1	Jochelson 1926
Tundra Yukaghir		*ackā*	*xa'icie* GdF, MB		2	*d°*
Japanese-Korean-Ainu						
Old Japanese				*kaka, haha* M	1	Starostin, Smith
Ryukyuan		*aka*			2	Ruhlen
Ainu		*ak* B+, *aki* B– *awa* B			2	Batchelor, Sugiura & Befu
Gilyak		*akand*		*ack* MBW, GdFW, GdFZ	2	Lévi-Strauss
Eskimo-Aleut						
Eskimo				**akka-k* FB	2	Fortescue *et al.*
West Greenland				*akkak* FB	2	Gessain *et al.*
East Greenland				*akka* FB	2	*d°*
Thule				*ak'äk* FB	2	Birket-Smith 1928
Melville Peninsula				*akkaŋ* FB	2	*d°*
Simpson Peninsula				*akkaq* FB	2	*d°*
Upper Kazan River				*akkaq* FB	2	*d°*
Labrador				*akka* FB	2	Rasmussen
Kangianerm				*akkakkan* FB *akkan* M	2	*d°*
Northumberland				*uk'-kä* FB	2	Morgan 1871
Cumberland				*ŭk'-ŭgŭh* FB	2	Dall
Aleut			*kúkaq* GdM		1	Geoghegan
DRAVIDIAN						
Northeast						
Kurukh				*eŋkakas* FB–	1	Trautmann
Central						
Kolami				*kako* FB–	1	Trautmann

Parji			*akka* MF		2	Starostin
Proto-Gondi			**akō* MF		2	*d°*
Maria (Gondi)			*akko* MF		2	*d°*
Hill Maria (Gondi)			*kākŏ* MM	*kākā* FB–, MZH	1	Trautmann
Gomu Goya (Gondi)				*kāko* SpFM	1	*d°*
Kui-Kuvi			**ak-* MF		2	*d°*
Manda			*akko* GtGdF		2	Starostin
Betul			*akko* MF		2	*d°*
Kui (Kondh)			*ake* GdF, ancestor	*kāki* FB–, W	2/1	Starostin, Trautmann
Kuwi			*akku* GdF, ancestor		2	*d°*
Telugu				*akka* Z +	2	Starostin
South						
Tulu				*akka, akke* Z +	2	Starostin
Kannada				*akka* Z +	2	*d°*
Kodagu				*akke* Z +	2	*d°*
Tamil				*akka* Z +	2	*d°*
Malayalam				*akka* Z +	2	*d°*
AUSTRIC						
Austronesian		**kaka*			1	Ruhlen
Western Malayo-Polynesian						
Ontong Java		*kainga*			2	Firth
Rhade		*awa* B+, MB			3	De Hautecloque
Hanunoo (Philippines)		*qākak* B+, Z+			1	Conklin
Central Eastern Malayo-Polynesian						
Timor						
Tukudede		*kaka*			1	Capell 1944
Mambai		*kaka*			1	*d°*
Oceanic						
Motu		*kaka* B+, Z+			1	Seligman 1910
Sio	*ninguwawa*				3	Groves
Manga			*kogana* GdF		1	Cook
Tube Tube		*kaukaua* B+, Z+			1	Seligman 1910
Waga Waga	*aü*		*goga* GdPt		3/1	*d°*
Fidji		*tuaka* my B+	*tuka* my GdF		2	Thomson 1895
Gela (Florida Isl.).			*kukua* GdPt		1	Codrington
Longgu (Florida Isl.)			*kukua-nggu* GdPt		1	Hogbin
Visale (Guadalcanal)			*kukua-nggu* GdPt		1	*d°*
Susuu (Guadalcanal)			*kukua-nggu* GdPt		1	*d°*
Manus (Admiralty Isl.)	*kakali*				2	Mead
Bipi	*kali*				2	*d°*
Mbambatana (Choiseul Solomon)		*kaka* B+, Z+			1	Capell 1943
Hawaii		*käi'-kū-* B+, Z+		*käi'-kee kä'-na* S, BS, MBS, MBSS	1	Morgan 1871
Mon-Khmer						
Vietnamese	*câu [kăw]* MB				2	Pháp Viêt
Mnong-Gar		*koong* B+, MB			2	Condominas
Miao-Yao						

Yao		**kɔ*			2	Ruhlen
BURUSHASKI						
Hunza	*ŋgo* MB, FZH, etc.				2	Ali
SINO-TIBETAN	**quH* uncle, F in law				2	Starostin
Sinitic						
Old Chinese	**gu?*				2	*d°*
Tibeto-Burmese						
Tibetan				*khu* FB	2	*d°*
Burmese	**uh*				2	*d°*
Kachin				*gu*^{A} F in law	2	*d°*
Lepcha				*ku* FB	2	*d°*
Kiranti	**ku*				2	*d°*
Thulung	*kuk*				1	*d°*
Kaling	*ke*				2	*d°*
Dumi	*kiki* uncle				1	*d°*
Kulung	*kokpa* uncle				1	*d°*
Yamphu	*kwấn* uncle				2	*d°*
Limbu	*kukuwa*				1	*d°*
NA-DENE						
Haida	*qā*	*(ti-)ka(-gha)*			2	Mayer-Durlach
Continental Na-Dene						
Tlingit	*kák*			*akh-kēk* B –	1	*d°*
Eyak-Athabaskan						
Eyak	*aqaq* MB+, *aqaqcia* MB–				2	Birket-Smith & De Laguna.
Athabaskan						
Tolowa				*kaka* M	1	Gifford 1922
Carrier				*aki* MZ, FZ	2	Goldman
Apache				*-k'a?aʃ* MZ	2	Donald & Tighe
Navajo				*-k'à?í* MZ	2	Hoijer
AMERIND						
Almosan						
Kutenai				*kokt* MZ	1	Ruhlen
Algic						
Yurok				*kok* M (address term)	1	Gifford 1922
Mosan						
Wakashan						
Kwakiutl			*gágemp* GdF, *gágas* your GdF		1	Carrub
Salish						
Nisqualli		*kukh*			1	Ruhlen
Shuswap				*kix* Z+	1	*d°*
Okanagan				*kīka* Z+	1	*d°*
Kalispel				*qaxe* MZ	1	*d°*
Keresiouan						
Keresan	**wawa*				3	Hawley
Zia	*sawa?a* ego male *ano?wa* ego fem.				3	*d°*

Cochiti	*awa, wawa, anawa* ego male				3	*d°*
Santa Ana	*sawá?a* ego fem.				3	*d°*
Laguna	*s'anawe* ego male				3	*d°*
Acoma	*sanawe* ego male				3	*d°*
Siouan			**khų́* GdM		2	Matthews
Catawba	*koko* uncle				1	Speck & Schaef.
Mandan		*ų́ka* ego male			2	Matthews
Hidatsa		*áka* B+, MB ego male	*kų̃* GtGdM, MFZ, etc.	*ihká* M, MZ etc.	2	Matthews, Ruhlen
Crow		*íke* B+, MB, MMB, etc.			2	Matthews
Assiniboin			*kų́ši* GdM, etc.	*kų́* M in law, etc.	2	*d°*
Santee			*khų́si* GdM	*khų́* WM, etc.	2	*d°*
Teton			*khų́si* GdM	*khų́* M in law, etc.	2	*d°*
Winnebago			*kųųnį́k* GdM (addr.)		2	*d°*
Iowa			*kóni* GdM, etc.		2	*d°*
Omaha			*ką́* GdM, etc.		2	*d°*
Kansa			*kų̄* GdM, etc.	*kó* M in law	2	*d°*
Quapaw			*ką́* GdM		2	*d°*
Osage			*kó* GdM, WM		2	*d°*
Tutelo			*kukäk* GdF *kų́* GdM		1	Sapir 1913, Matthews
Biloxi			*kąxó* GdF, SpPtF *kąką́* GdM, SpPtM		1	Matthews
Ofo			*kóni* GdM		2	*d°*
Adai				*ahhi* aunt	3	Ruhlen
Caddoan			**ka* GdM		2	Taylor
Caddo			*ikáʔ* my GdM		2	*d°*
Pawnee			*atíka* my GdM		2	*d°*
Arikara			*atíkaʔ* my GdM		2	*d°*
Iroquoian						
Seneca				*kă-ga* Z–,*-hak* aunt	2	Morgan 1877, Ruhlen
Tuscarora				*gus-xahg* FZ	1	Ruhlen
Penutian						
Washington						
Chinook			*gaga* MF		1	Boas
Oregon						
Takelma				*xaga* MZ, *gū* W	1/2	Sapir 1907
Tfalatik				*kaka* aunt	1	Ruhlen
Alsea		*hāʔt*			3	*d°*
California						
Northwestern Wintun			*kiye* MF, MB, FZH	*ku* S	2	Gifford 1922
Northeastern Wintun	*kiye* MB, MBS			*ku* S	2	*d°*
Central Wintun				*ku* Ch	2	*d°*
Mountains NthW. Maidu	*ka* MB, FZH				2	*d°*
Plains NthW. Maidu				*ka* Z–	2	*d°*
Southern Maidu	*kaka* MB, FZH				1	*d°*
Paleuyami	*kokwat*				1	*d°*
Yaudanchi	*akash*				2	Kroeber
Yawelmani	*agas*				2	Gifford 1922
Tachi	*agas* MB, MBS				2	*d°*

Mutsun				*ka* D	2	*d°*
Southern Miwok	*kaka* MB, MBS, etc.			*kawu* FZH	1/2	*d°*
Northern Miwok	*kaka* MB, MBS, etc.			*kawu* FZH	1/2	*d°*
Central Miwok	*kaka* MB, MBS				1	Gifford 1916
Plains Miwok	*kaka*			*kakatci* MBS	1	Gifford 1922
Lake Miwok	*kaka* MB, MBS			*kauko* FZH	1	*d°*
Coast Miwok	*kaka*				1	*d°*
Bodega Miwok	*káaka*				1	Callaghan
New Mexico						
Zuñi	*kaka* MB, MMZS, HMB			*kuku* FZ, *kawu* Z+	1/1	Schneider & Roberts
Gulf						
Chitimacha	*wa*			*kō* MZ, *kăn* FB	3/2	Swanton 1919
Tunica	*ki*				2	*d°*
Atakapa	*waxc* MB, FB			*waci* old *hican* F in law	3	*d°*
Yuki	*kīkan* MB–, FZ–H				1/2	Gifford 1922
Coast Yuki	*kaha?*				1	*d°*
Wappo	*awa* MB+			*ek'a* S	3	*d°*
Natchez		*gaga*			1	Swanton 1928
Koasati				*ki* M	3	*d°*
Creek		*aha*				*d°*
Mexican						
Huave		*kóh* B+, Z+			2	Romney
Totonac	*koko* uncle				1	Radin
Mixe		*ahč, aich*			2	Ruhlen, Radin
Sayula		*axč*			2	Ruhlen
Zoque	*qeex* uncle	*?atsi*			1/2	La Grasserie; Greenberg
Maya	*acan* man's MB, FZH, MGdF				2	Eggan
Tzeltal	*-ič?an* MB, MBS, MBSS, etc.		*kuku* GdM, etc.		2/1	Sousberghe *& al.*
Kekchí	*ican* uncle	*as'*			2/3	Sedat
Quiche	*ikan* uncle				2	Greenberg 1987
Hokan						
Northern						
Karok	*xukam* uncle			*?akah, aka* F	1/2	Ruhlen, Gifford 1922
Achomawi	*kex* uncle		*akun* MF		1/2	Ruhlen, Gifford 1922
Atsugewi			*aqon* MF		1	Gifford 1922
Eastern Pomo			*gach* MF	*keh* FB	2/2	Kroeber
Central Pomo				*kegu* Ch, FZCh	2	Gifford 1922
Northern Pomo		*agi?*		*aka* HM	2/2	*d°*
Southwestern Pomo			*kakan* MM		1	*d°*
Kashaya		*-ki-*			2	Ruhlen
Salinan-Chumash						
Salinan		*kaai*		*kiye* MBS ego male	2/2	Ruhlen, Gifford 1922
Island Chumash				*u-kâ?-kâ?* my F	2	Gifford 1922
Seri-Yuman						
Antoniño		*kāi*			2	Mason

Migueliño		*kāiya*			2	*d°*
Mohave	*n-akwi-k* my MB		*n-akauk* my MM, *n-akweu-k* my MF	*ahko?o-k* DCh, ZCh	2	Kroeber
Yuma				*caca'v* male X cousin, *ko* F	3	Halpern; Greenberg
Coahuiltecan						
Coahuiltec			*caca* FM		3	Romney
Southern						
Jicaque	*kokam* uncle				1	Ruhlen
Central Amerind						
Tanoan						
Tewa				*ko?ō* aunt	1	Ruhlen
Uto-Aztecan			**k^{w}a* GdF, **ka* GdM	**ko* Z +	2	Miller
Yaqui				*ako* Z +	2	Shimkin
Aztec		*ačka*			2	*d°*
Mono	*aci*				2	Miller
Shoshone			*gago* MM, DS, DD		1	Ives
Comanche			*kaku?* GdM (MM ?)		1	Miller
Kawaiisu				*kugu* F	1	Kroeber
Southern Paiute			*kaku* GdM		1	Miller
Uintah Ute			*kagu* MM		1	Kroeber
Tülatulabal			*aka* FF		2	*d°*
Kitanemuk			*kukin* FPt		2	Gifford 1922
Serrano			*-ka?, kakam* FPt *-k^{w}ar* MF	*kḗr* Z+	1/2	Miller, Shimkin
Luiseño			*ka?* FPt, *-k^{w}à?* MF		2/2	Kroeber
Cahuila			*ka?* FPt, *k^{w}a* MF		2/2	Gifford 1922
Cupeño			*ka?* FPt, *k^{w}a* MF		2/2	*d°*
Hopi			*k^{w}a?a* MF	*-ka?a* FZ	2/2	Miller
Papago			*kak, ka?a* FM		1	Miller, Shimkin
Pima			*khak* FM, FMZ		1	Shimkin
Tepecano			*kaka-ri* FM		1	*d°*
Cora		*ha?*		*ah ku?* Z +	3/2	Romney
Varohio			*kukuri* MF, FB	*ka?ká* MZ	1	Ruhlen, Miller
Opata				*ku* Z +		Shimkin
Oto-Manguean						
Pame				*akkwa* B in law	2	Romney
Ixcatec				*kwa?a* aunt	1	Ruhlen
Mixtec		*ku?u, kwa?a* fem. speaking				De Angulo
Chibchan-Paezan						
Chibchan						
Tirub	*kega* uncle			*kak* aunt	1	Ruhlen
Matagalpa	*kuku-ke* uncle				1	*d°*
Paya	*uku* uncle				2	*d°*
Kagaba				*kukui* aunt, niece	1	*d°*
Andean						
Quechuan						
Modern Quechua	*kakay*				1	Webster
Inca Quechua	*kaka* MB, WB, WF				1	Zuidema
Southern						
Ona				*kakan* aunt	1	Ruhlen

Equatorial-Tucanoan						
Macro-Tucanoan						
Masaca	*kokomai* uncle				1	Ruhlen
Yeba	*kako* uncle				1	*d°*
Equatorial						
Waraicu	*ghuk* uncle				1	Ruhlen
Manao	*ghooko* MB				1	*d°*
Sanamaika	*koko* uncle				1	*d°*
Mashco	*kokoa* uncle				1	*d°*
Kushichineri	*koko* uncle				1	*d°*
Cuniba	*kuku* uncle				1	*d°*
Bare	*koko* uncle				1	*d°*
Canamari	*ghughu* uncle				1	*d°*
Piro	*koko* uncle				1	*d°*
Ge-Pano-Carib						
Macro-Carib						
Apiaca	*koko* uncle				1	Ruhlen
Bakairi	*kxuɣu* uncle				1	*d°*
Pimenteira	*kuckú* uncle				1	*d°*
Macro-Panoan						
Cavineña	*ekoko* uncle				1	Ruhlen
Panobo	*kuka* uncle				1	*d°*
Pacawara	*kuko* uncle				1	*d°*
Macro-Ge						
Palmas		*kẽke-* B+, Z+			1	Ruhlen
Apucarana		*kanki*			2	*d°*
Oti		*koaka* B			1	*d°*
AUSTRALIAN						
Non-Pama-Nyungan						
Diverse						
Mangarayi		*wawa*	*ga-gak* MM, MMB, FFZ		3/1	Warner
Nakkara			*ga-gak* FF, MM, FFZ, SS, SD		1	*d°*
Gagudju			*ka-ka* FF, MM, FFZ			*d°*
Gunbudj			*ga-gak* FF, MM			*d°*
Murinbata	*kaka*				1	Stanner
Burarran						
Guragone			*gagag* ?FM		1	Usher
Gunwinyguan						
Jawony			*gagog* MF		1	Usher
Renbarnnga	*kain*				2	Warner
Ngandi	*kai-kai*	*wa'-wa*			1/3	*d°*
Gunwinygu			*ga-gak* FF, MM, FFZ, SS, SD		1	*d°*
Ngalakan	*gayka*	*gaka* B fem. sp., B– male sp.			1	*d°*
Gudangbon			*gagag* FM		1	Usher
Ngalkbon			*ga-gak* GdPt, GdCh		1	Warner
Maran						
Mara			*kuku, gogo* MM, MMB		1	Warner, Spencer & Gillen

Yikul				*gogo* MMB	1	Warner
West Barkly						
Wambaya			*kukunia* MM	*koko* WMF	1	Spencer & Gillen
Gnanji		*kakula* B–	*kanku* FF, SS	*kakalina* Z–	1/2	*d°*
Binbinga			*kanku* FF, SS *kukunia* MM	*kai-kai* H, *ku* DCh, DDCh	2/1 1/2	*d°*
Tjingili			*kukunai* MM		1	*d°*
Daly						
Marithiyel = Brinkan	*ka'-ka*				1	Warner
Maringarr	*kaka* MB, MFBS, FZH			*ngaka* Z	1	Scheffler
Malakmalak	*ga-gŭn*			*kaka* F in law	2/1	Warner
Djamindjung	*ga-ga*				1	*d°*
Nyulnyul	*kaga* MB, FZH				1	Elkin 1931-1932
Wororan						
Wunambal	*gaga* MB, MBS, MF				1	Lucich
Worora	*kakaia* MB, MBS, MF				1	*d°*
Pama-Nyungan						
Unclassified						
Wailwun		*kukkā* grown-up			1	Ridley
Woŋaibon		*kága* B+, elder	*kágamba* FF, MMB		1	Radcliffe-Brown 1923
Maraura	*wakia*	*kakwia*			3/1	Radcl.-Br. 1918
Tati Tati	*kuau, kwau*				2	*d°*
Naraltu	*kadaga*				2	*d°*
ŋganguruku	*wawur*				3	*d°*
Yandairungo				*kaku* Z+	1	Fison
Kurnai			*kūkŭn* MM, MMB, MMZ		1	Fison & Howitt
Anula	*tjakaka* MB+		*ukuku* MM, MMB		1	Spencer & Gillen
Kurnandaburi	*kaka*				1	
Yuulgnu						
Yandjinang	*kaiki* MB				1	Warner
Dhuwal	*gaykay*				1	Heath
Ritharngu	*kai-kĭng* MB	*wa-wrŭng*		*kai-kung* MBSS	1/3	Warner
Dhay'yi	*ga'-wel* MB	*wa-wa*			2/3	*d°*
Tangic						
Lardil	*kaku* MB, DH				1	Hale
Paman						
Linngithigh	*kōgai* MB+, MFB, MFF, FZH, MFZ, MZ				1	McConnel
Ngkoth	*kɔt* MB+				2	*d°*
Yinwum	*ŋkɔra* MB+				2	*d°*
Aritinngithigh	*kūtyai* MB+				2	*d°*
Awngthim	*kōgo* MB+				1	*d°*
Mbiywom	*kūde* MB+				2	*d°*
Gog Nar	*kaghat* uncle				1	Usher
Ntrangith	*kōk* MB+				1	McConnel
Maric						
Guwa	*kaŋga* MB				2	Usher
Gumbaynggir	*kowa*				2	Palmer

Wiradhuric						
Ngiyambaa		*kaakaa* B, cousin			1	Usher
Wiradhuri		*kagan* B			1	Ridley
Baagandji	*wākkajā*	*kaaku-tya* B+			2/1	Curr, Usher
Ngarinyeri-Yithayitha						
Ngarinyeri	*kawa* his MB				2	Radcl.-Br. 1918
Ngayawung				*ngaingaka* my M	1	*d°*
Yithayitha				*ŋgaaka* M	1	Curr
Karnic						
Pitta Pitta				*kâ-kō* Z	1	Roth
Urabunna	*kagaga*			*kaku* Z+	1	Elkin 1938
Wonkonguru	*kaga*			*kaku* Z+	1	*d°*
Pirltapa	*kaka*			*kaku* Z+	1	*d°*
Diyari	*kaka*			*kaku* Z+	1	Woods
Murawaric						
Murawari	*kaai*			*kaia* M	2	Woods
Arandic						
Eastern Aranda		*kakë* B+			1	Usher
South-West						
Malngin	*ga-ga*				1	Warner
Gurindji			*kaku* FF, SCh		1	McConnel
Karadjeri	*kaga* MB, FZH				1	Scheffler
Ngaluma	*kaga*	*kaia*			1/2	Radcl.-Br. 1913
Kariera	*kaga* MB, FZH	*kaja*			1/2	*d°*
Marthuyhunira		*kaia*			2	*d°*
Nyungar	*kongk(a), kangku*				2	Usher
Biboulmoun	*kongk*				2	Bates
INDO-PACIFIC						
Trans-New Guinea						
Main Section						
Finisterre-Huon						
Kate		*haha?-* his B+			3	Usher
Mape		*kaka-* his B+			1	*d°*
Gus		*këkëi, kak* B+			1	*d°*
Nekgini		*kak* B+			1	*d°*
Ngaing		*kak* B+			1	*d°*
Gira		*këkëi* B+			1	*d°*
Selepet				*kaha* BW male.sp., ZH fem. sp.	2	McElhanon
East N.G. Highlands						
Gadsup		*-wa*		*ka?e* S	3/2	Capell 1949
Agarabi				*ka* S	2	Capell 1949
Kamano	*āku?*				2	Berndt
Fore		*-uwa*			3	Capell 1949
Medlpa		*a(ŋ)gi-ra, a(ŋ)gu* B	*kouwa* GdF		2	Usher, Strathern
Chimbu		*a(ŋ)gi-ra, agela* B			2	Usher
Wahgi		*a(ŋ)gi-na, a(ŋ)ga* B			2	*d°*
Kuman			*awa* GdM		3	Nilles
Huli			*agua* GdM		3	Glasse

Enga (= Mae Enga)	*awea* (addr.)			*kakei* Z (addr.)	3/1	Meggit
Kewa			*kakua* GdF		1	Usher
Ctr. Sth N.G. Kutubuan						
Pole			*kasua* GdF		2	Usher
Foe			*taunh wa* GdF		3	*d°*
Fasu			*kaua* GdF		2	*d°*
Kutubu				*ka* W, *kaua* F in law, DH male sp.	2	Williams
Telefomin (Telefol)	*kokoot* your MB				1	Healey 1962
Duna	*auwine*		*auwene* GdPt		3	Modjeska
Mombum		*agha* B+, Z+			3	Modjeska
Gogodala-Suki						
Gogodala		*kaka* B+			1	Usher
Sentani						
Demta		*on kake* his B–			1	Usher
Tabla		*aka* B+			2	*d°*
Nafri		*axa* B+			2	*d°*
Sentani		*axa* B+			2	*d°*
Wissel Lkes -Kemandoga						
Kapauku (= Ekagi)		*nauwa* my B+		*niikai* my M, *niika* my MZ, *ani-waka* my W	3/2	Pospisil
Dani-Kwerba						
Konda Dani		*owe*		*agaak* FZS	3/2	O'Brien
Dani		*owe*			3	O'Brien
Grand Valley Dani		*oe* B+, Z+		*akot* B–, Z–, *ake* W, *akun* H	3/2	Heider
Saberi		*aka* B+, Z+			2	Usher
Kauwerawet		*akam* Z (?+)			2	*d°*
Madang - Adelbert Rge						
Rai Coast						
Nganglau		*këk* B+ m. sp., Z+ f.sp.			1	Usher
Saep		*kag-* B+ m. sp., Z+ f.sp.			1	*d°*
Usufura	*kāʔkɔ̃ɔ*				1	Berndt
Yangullam		*ewe*		*akwe* W	3/2	Ploeg
Teberan-Pawainan						
Dadibi	*awa*		*wai?* GdF, *auwa* GdM	*au* WM m. sp., DH f. sp. *wai* WF, DH m. sp., BDH f. sp.	3	Wagner
Trans-Fly - Bulaka Riv.						
Yelmek			*kaga* GdPt, GdCh		1	Usher
Maklew			*kaga* GdPt, GdCh		1	*d°*
Kiwai	*gáu* MB+, FB+				2	Landtman
Mek						
Jale		*oe*			3	Koch
Nimboran						
Mekwei		*aka* B+, Z+			2	Usher
Timor-Alor-Pantar						
Makasai		*kaka* B+, Z+			1	Capell 1944
Oirata		*ka(ka)*			1	Usher
Fataluku		*kaka*			1	*d°*

Bunak		*ka?*			2	Capell 1944
West Papuan						
Bird's Head						
Moi	*kak*				1	Usher
Sepik-Ramu						
Sepik						
Mundugunor		*kakai* B–			1	McDowell
Abelam	*wau*	*kai* B f. sp.			3/2	Kaberry
Iatmül	*wau*				3	Bateson
Hewa			*au* GdF		3	Steadman
Nor-Pondo						
Kopar		*kakan* B + m. sp.			1	Usher
Ramu						
Rao		*kë* B			2	Usher
East Papuan						
Sulka	*kak, kek* uncle				1	Usher
Sta Cruz - C. Mendaña			*kako* MPt		1	Davenport
Unclassified						
Baktamin			*awárek* my FF, MF, *awók* my FM, MM		3	Barth & Reitan
Kaimbi				*kan* S fem. sp.	2	Nelson
Jate	*a?ku?*		*a?gɔɔ?* FM		2	Berndt
Iafar				*awaag* F	2	Juillerat
Mbowamb				*wawa* FB	3	Brandewie

REFERENCES

ABERLE David. F. 1953. *The Kinship System of the Kalmuk Mongols.* Albuquerque: University of New Mexico.

AHLQVIST August E. 1891. *Wogulisches Wörterverzeichnis.* Helsinki.

ALI Tahir. 1983. *The Burusho of Hunza: Social Structure and Household Viability in a Mountain Desert Kingdom.* Ann Arbor: University Microfilms International. Quoted in GODELIER *et al.* 1998.

BANCEL Camille & Fanny TRAVAGLINO. 2001. Unpublished field notes.

BARTH Fredrik & Oddny REITAN. 1980. "Baktamin (Faiwolmin) Kinship: A Preliminary Sketch," in COOK & O'BRIEN 1980, 283-298.

BATCHELOR John D. 1926. *An Ainu-English-Japanese Dictionary.* Tokyo - London: Kyobunkan - Paul, Trench & Trubner.

BATES Daisy M. 1923. "Tribus du sud-ouest de l'Australie," *Revue d'ethnographie* IV, 225-240.

BATESON Gregory. 1932. "Social Structure of the Iatmül People of the Sepik River," *Oceania* II, 3, 245-291.

BEATTIE John H. M. & R. G LIENHARDT (eds.). 1975. *Studies in Social Anthropology. Essays in Memory of E. E. Evans-Pritchard.* Oxford: Clarendon.

BERNDT Ronald M. 1954. "Kamano, Jate, Usufura and Fɔ:rɛ Kinship of the Eastern Highlands of New Guinea: A Preliminary Account," *Oceania* XXV, 1-2, 23-53.

BIEBER Friedrich J. 1923. *Kaffa. Ein Altkuschitisches Volkstum in innerer Africa,* vol. II. Wien: Anthropos.

BIRKET-SMITH Kaj. 1928. "Five Hundred Eskimo Words. A Comparative Vocabulary from Greenland and Central Eskimo Dialects," *Report of the 5th Thule Expedition 1921-1924* vol. III, 3. København: Nordisk Forlag.

BIRKET-SMITH Kaj & Frederica DE LAGUNA. 1938. *The Eyak Indians of the Copper River Delta, Alaska.* København: Levin & Munskgaard.

BOAS Franz. 1902. "Vocabulary of the Chinook Language," *American Anthropologist* VI, 1, 118-147.

BOLTON Ralph & Enrique MAYER (eds.). 1977. *Andean Kinship and Marriage*. Washington: American Anthropological Association.

BRANDEWIE Ernest. 1974. "A Note on Three Kinship Terms of the Mbowamb of the Central Highlands of New Guinea," *Oceania* XLIV, 3, 204-215.

CALLAGHAN Catherine. 1970. *Bodega Miwok Dictionary.* Berkeley: University of California Publications in Linguistics.

CAPELL Arthur. 1943. "Notes on the Islands of Choiseul and New Georgia, Solomon Islands," *Oceania* XIV, 1, 20-29.

CAPELL Arthur. 1944. "Peoples and Languages of Timor," Part II, *Oceania* XIV, 3, 311-337.

CAPELL Arthur. 1949. "Distribution of Languages in the Central Highlands New Guinea", *Oceania* XIX, 4, 349-377.

CARRUB David. S.d. *A Practical Writing System and Short Dictionary of Kwakw'ala.* Canadian Ethnology Service, paper 34.

CODRINGTON Robert Henry. 1891. *The Melanesians. Studies in their Anthropology and Folk-lore.* Oxford: Clarendon.

CONDOMINAS Georges. 1960. "Les Mnong-Gar du Centre Vietnam," in MURDOCK 1960, 12-23 & 157-158.

CONKLIN Harold C. 1964. "Ethnogenealogical Method", in GOODENOUGH 1964.

COOK Edwin A. 1980. "Manga Kinship Terminology," in COOK & O'BRIEN 1980, 397-422.

COOK Edwin A. & Denise O'BRIEN (eds.). 1980. *Blood and Semen. Kinship Systems of Highland New Guinea.* Ann Arbor.

CURR Edward. M. 1886-1887. *The Australian Race: Its Origin, Languages, Customs, Place of Landing in Australia, and the Routes by Which It Spread Itself Over the Continent.* Melbourne: J. Ferres.

DALBY David. 1964. "Provisional Identification of Languages in the *Polyglotta Africana*," *Sierra Leone Language Review* III, 83-90.

DALL William H. 1877. *Tribes at the Extreme Northwest.* Washington: Government Printing Office.

DAVENPORT William. 1964. "Social Structure of Santa Cruz Island", in GOODENOUGH 1964.

DE ANGULO Jaime. 1925. "Kinship Terms in Some Languages of Southern Mexico", *American Anthropologist* XXVII, 103-107.

DOLGOPOLSKY Aharon. 1999. "The Nostratic Macrofamily: a Short Introduction," in RENFREW & NETTLE 1999.

DONALD Leland (ed.). 1987. *Themes in Ethnology and Culture History.* Meerut: Archana.

DONALD Leland & Marion TIGHE. 1987. "A Formal Analysis of Three Apachean Kinship Terminologies," in DONALD 1987.

EGGAN Fred. 1934. "The Maya Kinship System and Cross-Cousin Marriage," *American Anthropologist* XXXVI, 2, 188-202.

EHRET Christopher. 1980. *The Historical Reconstruction of Southern Cushitic Phonology and Vocabulary.* Berlin: Dietrich Reimer.

ELKIN Adolphus. 1931-1932. "Social Organization in the Kimberley Division, Northwestern Australia," *Oceania* II, 3, 296-333.

ELKIN Adolphus 1938. "Social Organization in South Australia," *Oceania* IX, 1, 41-78.

FERRY Marie-Paule. 1974. "Termes de parenté utilisés par les populations du département de Kédougou (Sénégal)," *Bulletin de l'Institut fondamental de l'Afrique noire* XXXVI, B 3, 613-627.

FIRTH Raymond. 1970. "Sibling Terms in Polynesia," *Journal of the Polynesian Society* LXXIX, 272-287.

FISON Lorimer & Alfred HOWITT. 1880. *Kamilaroi and Kurnai.* Melbourne: George Robertson.

FORTESCUE Michael, Steven JACOBSON & Laurence KAPLAN. 1994. *Comparative Eskimo Dictionary with Aleut Cognates.* Fairbanks: Alaska Native Language Center.

GEOGHEGAN Richard H. 1834. *The Aleut Language.* Washington: Department of the Interior.

GESSAIN Robert, Louis-Jacques DORAIS & Catherine ENEL. 1982. *Vocabulaire du groenlandais de l'Est, 1473 mots des Ammassalimiut avec leur traduction en groenlandais de l'Ouest, français, anglais et danois.* Paris: Documents du Centre de recherches anthropologiques du musée de l'Homme V.

GIFFORD Edward W. 1916. " Miwok Moieties," *University of California Publications in Archeology and Ethnology* XII, 4, 139-194. Berkekey: University of California.

GIFFORD Edward W. 1922. "Californian Kinship Terminologies," *University of California Publications in Archeology and Ethnology* XVIII. Berkekey: University of California.

GLASSE Robert M. 1968. *Huli of Papua. A Cognatic Descent System.* Paris: Mouton.

GLUCKMAN Max. 1950. "Kinship and Marriage among the Lozi of Northern Rhodesia and the Zulu of Natal," in RADCLIFFE-BROWN & FORDE 1960.

GODELIER Maurice, Thomas R. TRAUTMANN & Franklin E. TJON SIE FAT. 1998. *Transformations of Kinship.* Washington: Smithsonian Institution.

GOLDMAN Irving. 1941. "The Alkatcho Carrier: Historical Background of Crest Prerogatives," *American Anthropologist* XLIII, 3, 396-418.

GOODENOUGH Ward W. 1964. *Explorations in Cultural Anthropology. Essays in Honor of George Peter Murdock.* New York: McGraw-Hill.

GREENBERG Joseph H. 1987. *Language in the Americas.* Stanford: Stanford University.

GREENBERG Joseph H. 2000. *Indo-European and Its Closest Relatives. The Eurasiatic Language Family.* Stanford: Stanford University.

GROVES William C. 1934. "The Natives of Sio Island, Southeastern New Guinea. A Study in Culture Contact," *Oceania* V, 1, 43-63.

GUTHRIE Malcolm. 1967-1971. *Comparative Bantu.* Farnborough: Gregg International. 4 vol.

HABERLAND Ecke & Marcello LAMBERTI. 1988. *Ibaaddoo ka-Ba'iso. Culture and Language of the Ba'iso.* Heidelberg: Carl Winter.

HALE Kenneth. 1982. "The Logic of Damin Kinship Terminology," in HEATH, MERLAN & RUMSEY 1982.

HALLPIKE Christopher R. 1972. *The Konso of Ethiopia. A Study of the Values of a Cushitic People.* Oxford: Clarendon.

HALPERN Abraham. 1942. "Yuma Kinship Terms," *American Anthropologist* XLIV, 3, 425-441.

HAUTECLOQUE-HOWE Anne DE. 1987. *Les Rhadés, une société de droit maternel.* Paris: Centre national de la recherche scientifique.

HAWLEY Florence. 1950. "Keresan Patterns of Kinship and Social Organization," *American Anthropologist* LII, 4, 499-512.

HEALEY Alan. 1962. "Linguistic Aspects of Telefomin Kinship Terminology," *Anthropological Linguistics* IV, 14-28.

HEATH Jeffrey. 1982. "Where is That (Knee)?: Basic and Supplementary Kin Terms in Dhuwal (Yuulgnu / Murngin)," in HEATH, MERLAN & RUMSEY 1982, 40-63.

HEATH Jeffrey, F. MERLAN & A. RUMSEY. 1982. *Languages of Kinship in Aboriginal Australia.* Sydney: Oceania Linguistic Monographs XXIV.

HEIDER Karl G. 1980. "Kinship-Based Social Categories of the Grand Valley Dani," in COOK & O'BRIEN 1980, 121-134.

HOGBIN Ian I. 1938. "Social Organization of Guadalcanal Florida, Solomon Islands," *Oceania* VIII, 4, 398-418.

HOIJER Harry. 1956. "Athapaskan Kinship Systems," *American Anthropologist* LVIII, 309-333.

HOWITT Alfred. 1891. "The Dieri and Other Kindred Tribes of Central Australia," *Journal of the Anthropological Institute of Great Britain and Ireland* XX, 30-104.

IVES John W. 1998. "Developmental Processes in the Pre-Contact History of Athapaskan, Algonquian and Numic Kinship Systems," in GODELIER *et al.* 1998, 94-138.

JOCHELSON Waldemar. 1926. "The Yukaghir and the Yukaghirized Tungus," *Jesup North Pacific Expedition* IX, 1. New York: Memoirs of the American Museum of Natural History II.

JOCHELSON Waldemar. 1933. *The Yakut.* New York: Anthropological Papers of the American Museum of Natural History XXXIII, 1, 35-225.

JUILLERAT Bernard. 1977. "Terminologie de parenté iafar (Nouvelle-Guinée). Etude formelle d'un système dakota-iroquois," *L'Homme* XVII, 4, 5-35.

KABERRY Phyllis M. 1940. "The Abelam Tribe, Sepik District, New Guinea. A Preliminary Report," *Oceania* XI, 2, 233-258.

KOCH Klaus-Friedrich. 1980. "Jalé Kinship: Taxonomic, Semantic, and Ethnographic Analyses, in COOK & O'BRIEN 1980, 233-279.

KOELLE Sigismund. 1854. *Polyglotta Africana.* Londres: Church Missionary House.

KROEBER Alfred L. 1917. *California Kinship Systems.* University of California Publications in American Archeology and Ethnology XII.

KUPER Hilda. 1950. "Kinship among the Swazi," in RADCLIFFE-BROWN & FORDE 1950.

LA GRASSERIE Raoul DE. 1898. *Langues zoque et mixe.* Paris: Maisonneuve.

LANDTMAN Gunnar. 1927. *The Kikwai Papuans of British New Guinea.* London: McMillan.

LEBEUF Jean-Paul. 1941-1942. "Vocabulaire Kotoko: Makari, Goulfeil, Kousseri, Afadé," *Bulletin de l'Ifan* III-IV, 160-174.

LEVI-STRAUSS Claude. [1947.] 6th print 1981. *Les Structures élémentaires de la parenté.* Paris: Mouton.

LOCKWOOD David G., Peter H. FRIES et James E. COPELAND (eds.). 2000. *Functional Approaches to Language, Culture and Cognition.* Amsterdam-Philadelphia: John Benjamins.

LUCICH Peter. 1968. *The Development of Omaha Kinship Terminology in Three Australian Tribes of the Kimberley Division, Western Australia.* Canberra: Australian Institute of Aboriginal Studies.

McConnel Ursula H. 1959. "Junior Marriage System of Cape York Peninsula. A Comparative Survey," *Oceania* XXI, 2, 107-145.

McConvell Patrick. 1934. "Neutralisation and Degrees of Respect in Gurindji," in Heath, Merlan & Rumsey 1982, 86-106.

McDowell Nancy [from the field notes of Margaret Mead and Reo Fortune]. 1991. *The Mundugunor.* Washington-London: Smithsonian Institution.

McElhanon Kenneth A. 1968." Selepet Social Organization," *Ethnology* VII, 3, 296-304.

Mason John A. 1912. *The Ethnology of the Salinan Indians.* Berkeley: University of California Publications in American Archeology and Ethnology X, 4, 97-240.

Matthews G. Hubert. 1959. "Proto-Siouan Kinship Terminology," *American Anthropologist* LXI, 2, 252-279.

Mayer-Durlach Theresa. 1928. *The Relationship Systems of the Tlingit, Haida and Tsimshian.* New York: American Ethnological Society.

Mead Margaret. 1934. *Kinship in Admiralty Islands.* New York: Anthropological Papers of the American Museum of Natural History XXXIV, 2, 181-358.

Meggit Mervyn J. 1964. "The Kinship Terminology of the Mae Enga of New Guinea," *Oceania* XXXIV, 3, 191-200.

Miller Wick R. 1967. *Uto-Aztecan Cognate Sets.* Berkeley - Los Angeles: University of California Publications in Linguistics XLVIII.

Modjeska Nicholas. 1980. "Duna Kinship Terminology: An Atrophied Iroquois System," in Cook & O'Brien 1980, 305-327.

Moñino Yves. 1995. *Le Proto-Gbaya. Essai de linguistique comparative sur vingt et une langues d'Afrique centrale.* Paris: Peeters - Selaf.

Morgan Lewis H. 1871. *Systems of Consanguinity and Affinity of the Human Family.* Washington: Smithsonian Institution.

Morgan Lewis H. [1877. *Ancient Society.*] French translation 1985. *La Société archaïque.* Paris: Anthropos.

Murdock George P. (ed.). 1960. *Social Structure in Southeast Asia.* New York: Viking Fund Publications in Anthropology XXIX.

Nash Manning. 1967. *Handbook of Middle American Indians*, vol. VI. London.

Nelson Hal. 1980. "Dakota Kin Terminology and the Status of Nonagnatic 'Siblings' in Kaimbi (Nebilyer Valley)," in Cook & O'Brien 1980, 371-395.

Nilles John. 1950. "The Kuman of Chimbu Region, Central Highlands New Guinea", *Oceania* XXI, 1, 25-65.

O'Brien Denise. 1980. "Kinship Terminology of the Konda Valley Dani," in Cook & O'Brien 1980, 43-76.

Pairault Claude A. 1964. "Structure de la parenté chez les Goula Iro," *Africa* XXXIV, 4, 360-369.

Palmer Edward. 1884. "Notes on Some Australian Tribes," *Journal of the Anthropological Institute of Great Britain and Ireland* XIII, 276-334.

Peristiany Jean G. 1975. "The Ideal and the Actual. The Role of the Prophets in the Pokot Political System," in Beattie & Lienhardt 1975.

Phap Viet Tù Diên. S.d. *Dictionnaire vietnamien-français.* Paris: Minh Tân.

Ploeg Anton. 1980. "Wanggulum Kinship Terminology," in Cook & O'Brien 1980, 77-120.

Pokorný Julius. 1959. *Indogermanisches etymologisches Wörterbuch.* Bern.

Pospisil Leopold. 1980. "Kapauku Papuan Kinship Terminology," in Cook & O'Brien 1980, 3-29.

Potapov Leonid & M.G. Levin. 1964. *The Peoples of Siberia.* Chicago: University of Chicago.

Radcliffe-Brown Alfred. 1913. "Three Tribes of Western Australia," *Journal of the Royal Anthropological Institute* XLIII, 143-194.

Radcliffe-Brown Alfred. 1918. "Notes on the Social Organization of Australian Tribes," Part I, *Journal of the Royal Anthropological Institute* XLVIII, 222-253.

Radcliffe-Brown Alfred. 1923. "Notes on the Social Organization of Australian Tribes," Part II, *Journal of the Royal Anthropological Institute* LIII, 424-447.

Radcliffe-Brown Alfred & Daryll Forde (eds.). 1950. *African Systems of Kinship and Marriage.* London: International African Institute - Oxford University.

Radin Paul 1931. "Mexican Kinship Terms", *University of California Publications in American Archeology and Ethnology* 31, 1, 1-14.

Rasmussen Knud. 1941. *Alaskan Eskimo Words.* København: Gyldendal.

RENFREW Colin & Daniel NETTLE (eds.). 1999. *Nostratic: Examining a Linguistic Macrofamily.* Cambridge (Engl.): The McDonald Institute for Archaeological Research.

RIDLEY William. 1875. *Kamilaroi and Other Australian Languages.* Sydney: T. Richards.

ROMNEY Antone Kimball. 1967. "Kinship and Family," in NASH 1967.

ROTH Walter E. 1897. *Ethnological Studies Among the Northwest Central Queensland Aborigines.* Brisbane - London: E. Gregory - Queensland Agent General Office.

RUHLEN Merritt. 1994. *On the Origin of Languages. Studies in Linguistic Taxonomy.* Stanford: Stanford University.

SAPIR Edward. 1907. "Takelma Indians of Southern Oregon," *American Anthropologist* IX, 30.

SAPIR Edward. 1913. "Yana Terms of Relationship," *University of California Publications in American Archeology and Ethnology* XIII, 4, 153-173.

SCHEFFLER Harold W. 1978. *Australian Kin Classification.* Cambridge: Cambridge University.

SCHURMANN Franz. 1962. *The Mongols of Afghanistan. An Ethnography of the Moghols and Related Peoples of Afghanistan.* s'Gravenhage: Mouton.

SCHNEIDER David M. & John ROBERTS. 1956. *Zuñi Kin Terms,* notebook n° 3. University of Nebraska.

SEDAT Guillermo. 1955. *Nuevo Diccionario de las lenguas kekchi y española.* Chamelco.

SELIGMAN Brenda Z. 1917. "The Relationship Systems of the Nandi, Masai, and Thonga," *Man* XVII, 45-46, 62-66.

SELIGMAN Charles. 1910. *The Melanesian of British New Guinea.* London: Cambridge University.

SELIGMAN Charles & Brenda Z. SELIGMAN. 1932. *Pagan Tribes of Nilotic Sudan.* London: G. Routledge.

SHIMKIN Dmitri N. 1941. "The Uto-Aztecan System of Kinship Terminology," *American Anthropologist* XLIII, 2, 223-245.

SHIROKOGOROFF Sergei Mikhailovitch. 1924. *Social Organization of the Manchus. A Study of the Manchu Clan Organization.* Shanghai: The Central Press.

SHIROKOGOROFF Sergei Mikhailovitch. 1929. *Social Organization of the Northern Tungus.* Shanghai: Commercial Press.

SMIRNOV Ivan Nikolaïevitch. 1898. *Les Populations finnoises des bassins de la Volga et de la Kama.* Paris: E. Leroux.

SMITH Robert J. 1962. "Japanese Kinship Terminology. The History of a Nomenclature," *Ethnology* I, 3, 349-359.

SOUSBERGHE Léon DE & Carlos ROBLES URIBE. 1962. "Nomenclature et Système de parenté des Indiens Tzeltal," *L'Homme* II, 102-120.

SPECK Frank G & C. E. SCHAEFFER. 1942. "Catawba Kinship and Social Organization with a Resume of Tutelo Kinship Terms," *American Anthropologist* XLIV, 4, 555-575.

SPENCER Baldwin & Franck James GILLEN. 1904. *The Northern Tribes of Central Australia.* London: McMillan.

STANNER W. E. H. 1936. "Murinbata Kinship and Totemism," *Oceania* VII, 2, 186-216.

STAROSTIN Sergei. *Tower of Babel. Etymological Database.* <http://starling.rinet.ru/babel.htm>.

STEADMAN Lyle. 1980. "The Hewa of the Lagaip River," in COOK & O'BRIEN 1980, 299-304.

STEINITZ Wolfgang. 1966. *Dialektologisches und etymologisches Wörterbuch des ostjakischen Sprache.* Berlin: Akademie.

STRATHERN Andrew. 1980. "Melpa Kinship Terms," in COOK & O'BRIEN 1980, 329-370.

SUGIURA Kenichi & Harumi BEFU. 1962. "Kinship Organization of the Saru Ainu," *Ethnology* I, 3, 287-298.

SWANTON John R. 1919. "Tunica, Chitimacha and Atakapa Languages," *Bulletin of the Bureau of American Ethnology* LXVIII. Washington: Government Printing Service.

SWANTON John R. 1928. "Social Organization and Social Usages of the Indians of the Creek Confederacy", *42th Annual Report of the Bureau of American Ethnology.* Washington: Government Printing Office.

SZIJ Enikő. 1998. *Terminy rodstva i svoistva v udmurtskom iazyke.* Budapest: Akadémiai Kiadó.

TAYLOR Allan M. 1963. "Comparative Caddoan," *International Journal of American Linguistics* XXX, 113-131.

THOMSON Basil H. 1895. "Concubitancy in the Classificatory System of Relationship," *Journal of the Anthropological Institute of Great Britain and Ireland* XXIV, 371-387.

TRAUTMANN Thomas R. 1981. *Dravidian Kinship.* Cambridge (Engl.): Cambridge University.

USHER Tim. 2002. Personal communication.

VREELAND Herbert H. 1953. *Mongol Community and Kinship Structures.* New Haven: Human Relations Area Files.

WAGNER Roy. 1980. "Daribi Kinship," in COOK & O'BRIEN 1980, 423-440.

WARNER William Lloyd. 1933. "Kinship Morphology of Forty-One North Australian Tribes," *American Anthropologist* XXXV, 1, 63-86.

WEBSTER Steven S. 1977. "Kinship and Affinity in a Native Quechua Community," in BOLTON & MAYER 1977.

WHITE Charles M. N. 1955. "Factors in the Social Organization of the Luvale," *African Studies* XIV, 13, 97-112.

WILLIAMS Francis E. 1924. "The Natives of the Purari Delta," *Anthropology Report* V. Port Moresby: Government Printer.

WOODS James Dominick & George TAPLIN. 1878. *The Native Tribes of South Australia.* Adelaide: E. S. Wigg.

WORDICK Frank J. F. 1970. *A Generative-Extensionist Analysis of the Proto-Indo-European Kinship System, With a Phonological and Semantic Reconstruction of the Terms.* Ann Arbor: Ph.D. thesis.

ZUIDEMA Reiner Tom. 1977. "The Inca Kinship System. A New Theoretical View," in BOLTON & MAYER 1977.

Tracing the Ancestral Kinship System : The Global Etymon KAKA

Part II: An anthropological study

Alain Matthey de l'Etang and Pierre J. Bancel[1]

Abstract: The semantic structure of the masculine etymological series GdF, MB, B+ is coherent with a kinship class that comprises the elder masculine relatives on the mother's side. The data also show a representative feminine series GdM, FZ, Z+, possibly representing the feminine elders on the father's side. Such terminological groupings suggest the existence of an ancestral terminology that recognized relatives according to sex, age status and filiation group. Such an ancestral model may easily have evolved into several well-known kinship systems such as the Crow, Omaha, or Dravidian systems.

1 PRESENTATION

1.1. Towards a proto-sapiens kinship terminology

The construction of the KAKA etymological series credits our hypothesis of the existence of a kinship terminology within *Homo sapiens* ancestral language, which one can suppose to be the origin of all existing kinship terminologies. This idea – which, as noted in the first part, most anthropologists reject – was outlined by Tooker (1992: 369)[2]. The present discussion aims to determine the original meaning of KAKA and to begin uncovering the semantic structure of the ancestral terminology to which this term belongs. Finally, as long as substantial features of this ancestral terminology can be brought to light, one of our objectives is also to examine the semantic relationships they might have with the terminology of the different systems that are used (or were used) by contemporary or historically known peoples.

1.2 Typology of kinship systems

Since Morgan published his monumental *Systems of Consanguinity and Affinity of the Human Family* (1871), in which he had brought together 139 complete terminological systems, social anthropologists have continuously collected kinship terminologies from every part of the world and have devoted much of their

[1] Association d'Etudes linguistiques et anthropologiques préhistoriques (Paris, France), Santa Fe Institute (Santa Fe, New Mexico) and Skidmore College (Saratoga Springs, New York).

[2] In examining the controversy between Morgan and McLennan about the nature of kinship systems, E.Tooker suggested: "*the primary kin terms (those for M, F, B, Z, W, H, D, S) and the relationships between them (marriage, descent, siblingship) out of which the kinship grid is built is an artificial one, invented but once early in man's history and hence part of the proto-language from which all known languages descend.*"

time and effort to interpreting them. This collective endeavour resulted in the working out of a global typology of kinship systems, which is presently subject to a precarious consensus[3].

The different systems are distinguished depending on the way they classify consanguineal and affinal relatives.[4] At ego's generation, for example, it is the matter of distinguishing or assimilating ego's brother B and sister Z, and the different varieties of cousins: "parallel cousins" P descending from the mother's sister MZ or the father's brother FB or "cross-cousins" X, descending from the mother's brother MB or the father's sister FZ. It is worth noting that this particular generation was chosen to differentiate all the various kinds of systems. Convenient as it may seem, schematizing systems by using a single generation level has nevertheless proven insufficient to express terminological equivalences that are not confined to just one generation, as is the case for the Crow and Omaha systems[5].

1.3 The origins of kinship systems

The questions dealing with the origins of kinship terminologies certainly constitute one of the most tantalizing subjects within the field of social anthropology. What are the mechanisms leading to the formation of kinship systems? Why are there several types of systems instead of just one? When did these systems first appear? What are the existing relationships between all these different systems? These are but a few questions that have been under constant scrutiny over the past hundred and fifty years.

---

[3] Godelier, Trautmann and Tjon Sie Fat (1998: 5-6) observe that kinship systems typology is subject to constant elaboration.

[4] L. H. Morgan (1871, 1877) established a distinction that became classical, between the *"classificatory systems"* which assimilate collateral and lineal relationships, and the *"descriptive systems"* which name many collateral relationships and also certain lineal relationships by the extension or combination of the so-called "primary terms". This distinction has been abandoned. Today one distinguishes systems depending on the way they classify collaterals at ego's generation. The systems that concern us here are described with the help of equivalences using the following symbols: german G for brother B and sister Z, parallel cousin P (descended from FB or MZ), cross-cousin X (descended from MB or FZ), followed by a p or an m depending on whether they are on the father's or the mother's side.

The systems are the following:

Eskimo: G ? (X = P)

Hawaiian: G = X = P

Dravidian and Iroquoian: (G = P) ? X. At this generation level the Dravidian system differs from the Iroquoian in using the same terms for cross-cousins X and husband H and wife W.

Crow-Omaha: (G = P) ? Xp ? Xm

[5] Crow and Omaha systems also named "unilineal" or "skewed" systems, terminologically assimilate relationships across several generations. Thus, one of the variants of the Omaha system (Omaha III) assimilates, among others, the maternal grandfather MF, the mother's brother MB, his son MBS, his grandson MBSS, whereas one of the variants of the Crow system (Crow II) assimilates the maternal grandmother's brother MMB, the mother's brother MB and the elder brother B+. Lounsbury (1964), published seven variants of these two systems accompanied by ethnological examples.

From the very beginning, under the influence of Morgan, social anthropologists have considered kinship as an indirect reflection of biological (consanguineal) relationships, through the filter of social and marital relationships (thus including affinal relationships).

This opinion persists today. As Godelier, Trautmann and Tjon Sie Fat (1998: 5) have observed, the idea of the "influence" of marital rules upon kinship terminologies continues to be a major avenue in contemporary social anthropology. Meanwhile, modern research has abandoned the evolutionary cover in which this idea was wrapped until the beginning of the 20th century. Most anthropologists then considered the different types of systems as the expression of the different social and marital institutions that had succeeded one another through time. These social institutions were thought to be linked to the numerous stages successively reached by the different branches of mankind, on their way from "barbarism" to "civilization".

Today kinship systems are no longer considered to be traces of social evolution. Rather they are believed to be the result of choices made by societies and to be rooted in mental processes. Lévi-Strauss (1991: 87-88) always appealed to the "*fundamental structures of the human mind*" to account for the common basis of the various expressions of culture. As a result of this structuralist shift, that took place during the first half of the 20th century, scholars moved away from the former historical approach, denying any relatedness between structurally comparable systems other than those attributed to geographical proximity or linguistic community: "*Identity of the type of kinship terminology between distant regions cannot be attributed to historical connections and must be explained in relation to general properties of the human mind*" (Godelier, Trautmann and Tjon Sie Fat 1998: 6).

This methodological restriction consequently limits the historical approach of kinship systems to the field of local or regional linguistic families, which is precisely the field to which traditional comparative linguistics has limited its own investigations. This is a crucial point where these two disciplines meet and even more precisely, where social anthropology meets the requirements of comparative linguistics.

Despite this limitation, this approach has proven quite constructive and useful, showing that a number of well-established systems are deeply rooted in a remote past, proto-historical and even prehistorical. The Omaha system was already used in Proto-Indo-European (Wordick 1970), the Dravidian system in Proto-Dravidian (Trautmann 1981), in Archaic Chinese (Kryukov 1998: 297), most probably in Proto-Athabaskan some 3000 years ago, and perhaps in Proto-Algonquian at the same period (Ives 1998: 105-106). There is also a good chance that the Eskimo system was used in Proto-Eskimo and the Iroquois system was used in Proto-Iroquoian, etc.

But it would be erroneous to believe that social anthropology has once and forever banned long-term historical views about kinship from its scope. As noted previously, a hypothesis of kinship terminology ancestral to all existing systems was set up by Tooker ten years ago. Allen also joined in a similar direction. One of his recent papers (1998) deals with the prehistory of Dravidian systems. Assuming that simple systems must necessarily have preceded more complex ones, the author posits one or more simple terminological systems, reduced to four terms (*"tetradic"*), from which, he believes, all existing Dravidian systems (and, perhaps, all the other types of systems as well) could derive[6]. Although he recognizes his model does not rest on direct historical evidence, but rather on a series of anthropological, sociological and historical "arguments," his attempt to investigate the prehistory of kinship certainly opens a new and important avenue of research.

---

[6] Allen speculates on what should be the simplest type of terminology most appropriate to evolve into a Dravidian system or, perhaps, into all other types of systems. He focuses on solutions involving a set of terms that do not address specific kin types but social units, as section names do in some Australian tribes. Finally, Allen draws an evolutionary sequence that supposes the reduction of the kin types designated by one term and consequently an extension of the terminology.

Our own approach is less pessimistic as regards historical evidence, as it relies on semantic regularities, obtained through a global etymological comparison, and how these regularities – such as they are – can be interpreted in terms of kinship or social structure. We think that the kinship lexicon at a global level constitutes global evidence, and may be indicative of the state of kinship at the time the ancestral language was spoken.

2 METHODS

2.1. Definition of a kinship etymon's meaning

The etymological gloss of a comparative series (multilateral or standard) usually summarizes, in a somewhat intuitive way, the different meanings of the words that have been compared. Presenting their global etymologies, Bengtson and Ruhlen (1994) insisted they were not giving "reconstructions" but semantic or phonetic "labels." In order to achieve a language classification, the distribution of the reflexes is more important than a precise reconstitution of its semantic content and phonetic shape.

But we are not aiming at establishing a language family (even though the exceptionally wide distribution of KAKA strongly advocates for a universal family). Our main objective is to highlight possible traces of the kinship system in usage among the Proto-Sapiens language speakers. This makes the semantic aspect of the comparison crucial.

The meaning of a kinship term is determined by the class of the various kin-types that it is likely to designate. (Such a class may of course consist of a single relative). This series of kin-types, which Wordick (1970: 63) termed *"total meaning"* encompasses, as we already noticed in part I, both the *"primary meaning"* (the fundamental kin-type designated by the term) and the *"secondary meaning(s)"* (all the other kin-types designated by the term) (Lounsbury 1964: 356-362).

But as Wordick (1970: 63-68) showed with regards to PIE, languages stemming from a common proto-language may preserve a reflex of a kinship proto-term without necessarily preserving its original meaning: sometimes the reflex has lost the secondary meanings, sometimes the primary meaning has been replaced by one of the secondary meanings, sometimes a new meaning has even been substituted for the original primary one[7]. These observations may also apply to kinship etyma like KAKA, the antiquity of which must be counted at least in dozens of millennia.

In the first part of our study we have established that the etymological series KAKA points to a set of meanings, at least a part of which, according to Wordick's argument, may reflect the original meaning.

2.2. The four tests of meaning

One might ask: what are the means at our disposal to distinguish the original relationships covered by a proto-term, from the relationships covered by its reflexes?

Wordick (1970: 66) mentions two ways by which this objective may be achieved. The first is statistical. The "*kernel set* (the set of kin-type that is original) *tends to predominate statistically among the total number of referents possible for that proto-form.*" The second is semantic: "*Finally, one can be sure that a particular meaning reflects a post-PIE development, when the referent in question overlaps with that of another securely established PIE kinship term.*"

The first means has been already mentioned and used as criterion for testing the validity of the KAKA etymological series. It measures the distribution of reflexes within the range of kinship positions, revealing the degree of semantic scattering, and helps to establish the semantic series, composed of the statistically significant relationships (part I section 3.1.3. and table 1). Needless to say, comparing hundreds of cognates gives this statistical test great value and efficiency.

---

[7] Wordick proposed for PIE **HewyH-os* GdF, MB, but some reflexes preserve only one meaning, for example Armenian *havu* grandfather GdF; other cognates present derived meanings, as Welsh *ewythr* "uncle" or Old Irish *(h)áue* "nephew."

The second means mentioned by Wordick has not been used, in the absence at this point of any other *"securely established"* kinship proto-term.

Two complementary tests have been used.

The first tests the semantic consistency of the series. This consistency is in proportion to the proximity each of the relationships will have in relation to the others within the kinship field. This includes the nature of the relationship (consanguineal or affinal), sex, age, etc.

The second accounts for the geolinguistic distribution of the different statistically representative relationships of a semantic series. The more numerous the major geographical areas and language families covered by one relationship, the more likely this relationship was part of the ancestral *"total meaning."*

We shall thus include in the class of relatives that might have been originally designated by an etymon (a class that can include one relationship), all the kin-types that meet the conditions of number, semantic consistency and geolinguistic distribution.

The most important criterion is obviously the first one, particularly on a global scale, and one should accept none of the meanings that do not meet this requirement.

2.3. A subsidiary test

The situation is different when dealing with statistically well-represented kin-types that either do not meet the consistency criterion (by displaying some sort of anomalous relationship within the series), the distribution criterion, or both criteria. These cases make the kin-type's pertinence to the series questionable.

That is why, in order to reach a decision, we shall appeal to a final test, anthropological in nature, which brings into play the different classes of relatives that are usually characteristic of the different types of systems. With regard to the ethnological reality, one must question the ability of several different representative relationships to build up a class of relatives that may be referred to a particular system. The answers to this last question do not have an absolute value, as they address contemporary realities, but they cannot be ignored when entering a complete discussion about meaning.

2.4. Building an anthropological model

We referred earlier to some of the numerous articles that address the question of proto-kinship systems reconstruction in various language families. As a matter of fact, most of them are mere lexical reconstructions, and only briefly address the problem of the original semantic structure (type) of the proto-terminologies, if not simply evading it.

Most of the studies that deal with this last question try to reach conclusive results by using methods generally based upon the comparison of the semantic features of the various kinship terminologies of the linguistic family under scrutiny. Trautmann (1981: 229) says he followed *"the example of historical linguistics"* when reconstructing the Proto-Dravidian kinship system (the system used by the speakers of Proto-Dravidian): *"Having identified and eliminated the foreign elements in the data, we can confidently attribute those features that are universal to the Proto-Dravidian kinship system."* The method used by Wordick (1970: 69-73) to determine the nature and extensively reconstruct the Proto-Indo-European kinship system, both lexically and semantically, also certainly deserves our attention. This author convincingly applied the formal techniques elaborated by Lounsbury (1964: 356-361) to data consisting of proto-terms reflexes taken from a large number of languages belonging to the IE family[8]. This approach proved very productive and seems applicable on a broader scale as long as one has extensive etymological data available.

---

[8] Lounsbury (1964: 357-358) formulates three main rules: the *"merging rule,"* that *"expresses the formal equivalence, in specified contexts, between siblings of the same sex,"* the *"half sibling rule"* that *"expresses the formal equivalence between half siblings and full siblings"* (FS and FD = MS and FD = B and Z) and the *"skewing rule"* that *"expresses the formal equivalence, in specified contexts, between kin types of different generations"*. These rules make relationship terminologies in specified contexts predictable. Here is an

Since we do not have such data at hand, we will rely on the semantic properties that emerge from the analysis of KAKA and interpret them in terms of kinship structure.

Inasmuch as the reflexes of a kinship etymon statistically refer to several relatives while meeting the semantic criteria just defined, information is to be obtained in terms of sex, age, generation, degree of kinship distance (either consanguineal or affinal), semantic pattern (the disposition of kin types upon the family tree), that can be referred to kinship structure, if not directly to particular types of kinship terminology. Generational diagrams are very helpful in building an anthropological model.

3. DISCUSSION

3.1.1. The KAKA semantic series

Since they meet the criteria defined in section 2.1, some of the relationships included in the etymological series (elder brother B+, mother's brother MB, grand-father GdF) must be considered as belonging to the original class of relatives referred to by KAKA: they are statistically representative (B+ 21 %, MB 31.1 %, GdF 22.9 %), they are all masculine consanguineal relationships, and each one of them is found in most of the major geographical areas covered by the series (Africa, Eurasia, the Americas and Australia) as well as in a large number of linguistic families.

As mentioned above, some other relationships within the etymological series do not meet all the criteria of meaning. Particularly the father's brother FB relationship, which is statistically less frequent (with 6.4%), and confined to a limited set of linguistic groups. There are also repeated occurrences of some feminine relationships, particularly at the grandparent generation level, which are at odds with the masculine majority relationships. It seems appropriate to question whether these meanings were indeed part of the original class.

3.1.2. The father's brother problem

We will use the subsidiary – anthropological – test to question the attachment of the father's brother FB to the class of relatives that KAKA originally designated.

There is no system that assimilates the four relationships of elder brother B+, father's brother FB, mother's brother MB and grandfather GdF statistically included in the semantic series. The mother's brother MB is the relationship of our series with which the father's brother FB is most commonly associated.

The Hawaiian system, on the one hand, generally uses a single term to designate the father F, the father's brother FB and the mother's brother MB.

On the other hand, there are systems, among which are those used in the French and English languages, which join the mother's brother MB and the father's brother FB in the same "uncle" class.

The reasons we do not think KAKA originally belonged to one of these systems are the following:

1. Had the original system been Hawaiian, one would have found traces of the father's F relationship, to which primarily refers the {father F, mother's brother MB, father's brother FB} Hawaiian class. But occurrences of the father F relationship are very rare in our sample; furthermore, we have not found any

---

example – given by Lounsbury (1964: 361-362) and quoted in Héritier (1981: 25) – of how, in the Omaha-type system of the Fox, one can predict the term designating the mother's mother's father's sister's son MMFZS. According to the skewing rule, in this Omaha context, the father's sister FZ is formally equivalent to a sister Z, so we can rewrite the relation as follows: MM(FZ)S = MMZS. In applying the "merging rule," according to which a mother's sister MZ is equivalent to a mother M, one obtains M(MZ)S = MMS. Moreover, according to the "half sibling rule," a mother's son MS is equivalent to a brother B, so we can write M(MS) = MB.. As a final result we obtain MMFZS = MB. This remote relationship will be thus termed "mother brother" MB.

system that has a reflex of KAKA encompassing the three relationships of {father F, father's brother F and mother's brother MB}.

2. One might wonder whether the uncle class {FB, MB} can be the result of an evolution that led some languages, that used to assimilate the father F and the father brother FB, to create a new "uncle" category, including most notably this last relationship (FB) and the mother's brother MB relationship. The Romance languages evolved thus. The Latin term for father's brother FB *patruus* was abandoned and a new term was created to name the newly connected relationships, a term that could, as in French *oncle,* be a reflex of Latin mother's brother MB *avunculus.* A brief glance at the data will convince the reader that the same process – perhaps influenced by the Romance languages – also took place in many other non-Romance Indo-European languages.

3. A thorough examination of the data has indicated that there is apparently a limited number of anthropologically documented terms, that we know clearly refer to both mother's brother MB and father's brother FB, and among these an even more limited number of terms, that are cognates of KAKA. Most of the reflexes of KAKA referring to both avuncular relationships have been recorded in the Amerind family and glossed "uncle", such as Totonac *koko* recorded by D. Pantaleon prior to 1752 and quoted in Radin (1931: 8), Kekchi *ican* (Sedat 1955: 79), Catawba *kokó* and numerous cognates recorded in South America and brought to light by Ruhlen (2000). It cannot be excluded that this Amerind series followed the same pattern of evolution as the PIE, although the gloss "uncle" might as well result from confusion between the avuncular positions made by the first European recorders[9]. In the absence of any documented evidence for such a linguistic evolution, one will not rush to a conclusion.

3.1.3. Feminine relationships

114 cognates (34.7 %) refer to feminine relationships as a kind of mirror image of the majority masculine relationships, especially at the grandparent generation.

78 terms (23.8 %) refer to the grandmother class: some designate, especially in Niger-Congo, Australian and Indo-European languages, both grandmothers MM and FM (e.g. proto-Siouan **ku)*, to the paternal grandmother FM, and more rarely to the maternal grandmother MM.

Moreover, 30 reflexes (9.1 %) designate the elder sister Z+: in Africa (Luba-Katanga : *kaaka* Z+) in Australia (Karnic *kaku* Z+), in India (Telugu *akka* Z+, Tamil *akka* Z+, Malayalam *akka* Z+, Kannada *akka* Z+, Kodagu *akke* Z+, Tulu *akka, akke* Z+ etc.).

Finally a more limited number of reflexes (6, 1.8 %) refer to the father's sister FZ (Hopi *ka'a* FZ, Zuni *kuku* FZ, Cheremys, *akaj* FZ- etc.). But this low number could be probably supplemented by some of the reflexes that may have been improperly glossed "aunt", for the same reasons some mother's brother MB reflexes were glossed "uncles"(see 3.1 2. above).

Considering the high statistical occurrence of these three relationships in the semantic series and their high semantic consistency, their affiliation to the original KAKA class of relatives cannot be ruled out.

3.1.4. Conclusion of part 3.1.

On the basis of the discussion developed in the present section, one will finally accept the masculine relationships of elder brother B+, mother's brother MB, grandfather GdF (MF and FF) and possibly the feminine relationships of elder sister Z+, father's sister FZ and grandmother (MM and FM) as the original relationships to which KAKA referred.

---

[9] Quite a few however have been fully aware of the difference between a father's brother FB and a mother's brother MB. For example, Juan de Cordova noted for Zapotec "FB" *pechetitia, pixioa* and "MB" *pizaana naaya* prior to 1576; Luis Gonzales Fray, for Zoque "FB" *tzeni,* "MB" *hamo,* prior to 1672; Fray Augustin de Quintana, for Mixe "FB" *tzucumteit* and "MB" *haim,* prior to 1733 (Radin 1931: 11-12), etc.

3.2. CONSTRUCTION OF AN ANTHROPOLOGICAL MODEL (diagrams A, B, C, D,) [10]

Data at hand do not require taking ego's sex into account in the naming of a kinship relation.

3.2.1 A cross-generational term

The semantic series, if one only takes into account the masculine relationships B+, MB and GdF, displays a remarkable structure. KAKA refers to relationships at different generation levels. Peculiar structures that cut across generations are known in a number of variants of the so-called Crow-Omaha kinship systems, briefly mentioned in note 5 above. Lounsbury (1964) published seven variants of these two systems, illustrated by ethnological examples. One of these variants (Crow 2) assimilates the maternal great-uncle MMB, the mother's brother MB, the elder brother B+ and a few other relationships (MMB = MB = B+); another variant (Omaha 3) assimilates the mother's father MF, the mother's brother MB, the mother's brother's son MBS, the mother's brother's son's son MBSS (MF = MB = MBS = MBSS). As we can see, both variants partially account for the masculine relationships included in the KAKA series.

3.2.2 A consanguinal relationship

KAKA apparently refers to consanguineal relationships: elder brother B+, mother's brother MB and grandfathers FF, MF.

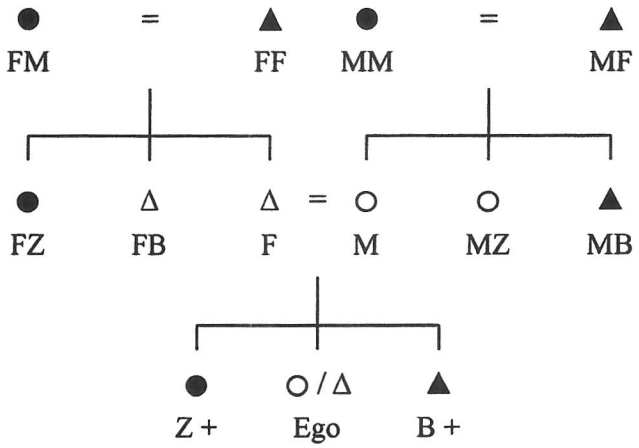

Diagram A. Full circles and triangles indicate the main relationships covered by KAKA.

3.2.3 A (masculine) elder of the mother's group? Diagrams A, B, C.

With the exception of the grandmother GdM, the father's sister FZ and the elder sister Z+ relationships, the vast majority of the data refers to masculine relatives older than ego: elder brother B+, mother's brother MB, maternal and paternal grand-fathers MF, FF (diagram A). These indications suggest that age distinction and probably status pertaining to it, were of pre-eminent importance in the *Proto-Sapiens* social organization.

---

[10] These diagrams are built using anthropological symbols. a triangle for a masculine relationship, a circle for a feminine relationship; an = sign signifies marriage ; a horizontal line signifies sibling-ship ; a vertical line signifies descent.

This mode of designation is in accordance with some contemporary ethnological realities. Numerous ethnic groups use a unique term (sometimes a reflex of KAKA) to designate the elders (or ancestors), just as in Latin *avus* 'forefather, ancestor', in Buriat *aka* 'elder' or Yakut *aha* 'elder', in Gorowa (Cushitic) *áako* 'old man, in Mayoruna (Panoan) *kuku* 'senior male cognate', in Woŋaibon (Australian) kaga 'elder', etc. Even more precisely, Shirokogoroff (1929: 174-175) noticed that the Northern Tungus used the term *aki* or *oki* to designate a man or a woman senior to the speaker inside his own (patrilinear) clan: the elder brother B+, the elder sister Z+, the father's brother FB, the father's sister FZ, the father's brother's son FBS, the paternal grand-father FF.

Moreover, the absence of the father F relationship, the marginal presence of the father's brother FB relationship, contrasting with the pervasive presence of the mother's brother MB relationship within the etymological series are powerful arguments indicating KAKA might have refered to elders belonging to the mother's group. This idea is also supported by ethnological examples [11].

From this consideration, one has to envisage the existence of exogamic filiation groups: classes, moieties, or clans.

Depending on the type of filiation (patrilineal or matrilineal), the elders on the mother's side are not the same persons. In a matrilineal filiation, the masculine elders most notably refer to the elder brother B+, the mother's brother MB, and the mother's mother's brother MMB. In a patrilineal filiation, they refer to the mother's brother MB and the mother's father MF. (Diagrams B and C)

One will observe that the KAKA semantic series refers to kin-types that can be accounted for, whether in a matrilineal filiation (B+), a patrilineal filiation (FF) or in both filiations (MB). This fact needs to be explained.

One must also explain the presence of the father's father FF relationship in the series.

The presence of kin-types pointing to opposite filiation types in a series of great antiquity can be accounted for, either by the fact that the Proto-Sapiens society had some kind of bilateral filiation, or the fact that some of the groups having emerged from this society, originally either matrilineal or patrilineal, changed their system of filiation at an early stage. The existence at an early period of both types of filiation can account for the corresponding relationships covered by the numerous reflexes. It does not seem that this hypothesis creates linguistic difficulties: the elders, members of the mother's group would have remained KAKAs. The change would only have affected the relationships this term refers to, except for the mother's brother MB, which remains in the mother's group, whatever filiation type there is. This might furthermore account for the relative pre-eminence of this relationship within the series.

The presence of the father's father FF relationship in the series finds an explanation when this relationship is associated with the mother's mother's brother MMB relationship (FF=MMB). This happens when the mother's mother MM and FF are siblings (diagram B), but also when the father's father FF and the mother's mother MM, the mother's father MF and the father's mother FM are respectively husbands and wives, as in the marriage of exogamic moieties or cross cousin marriage (Diagram D).

This hypothetical situation is somewhat reflected in the data by some reflexes associating the father's father FF and the mother's mother's brother MMB.

One can also explain the presence of the father's father relationship by the early extension of the KAKA term to all kin at generation + 2.

---

[11] Meyer-Durlach (1928 : 21) provides an excellent ethnological example mentioning that the matrilinealTlingit used the term *k`a'k`* to designate the mother's brother MB and that the plural of this form was used to refer to the ancestors (apparently masculine) belonging to the mother's clan.

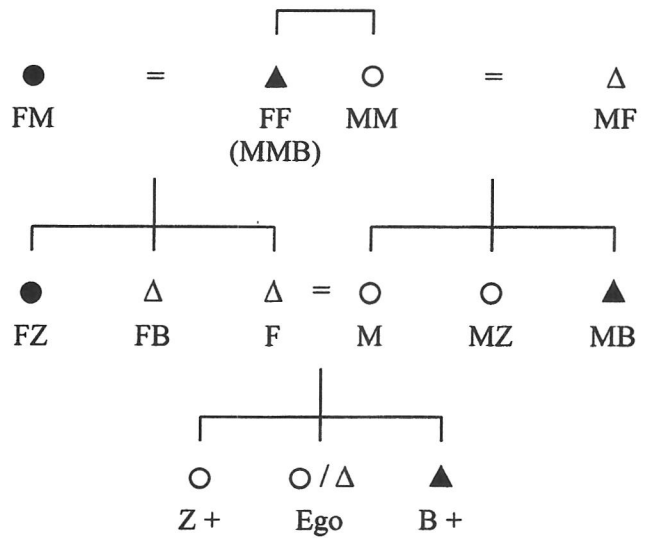

Diagram B. Relationships covered by KAKA in a matrilineal filiation.

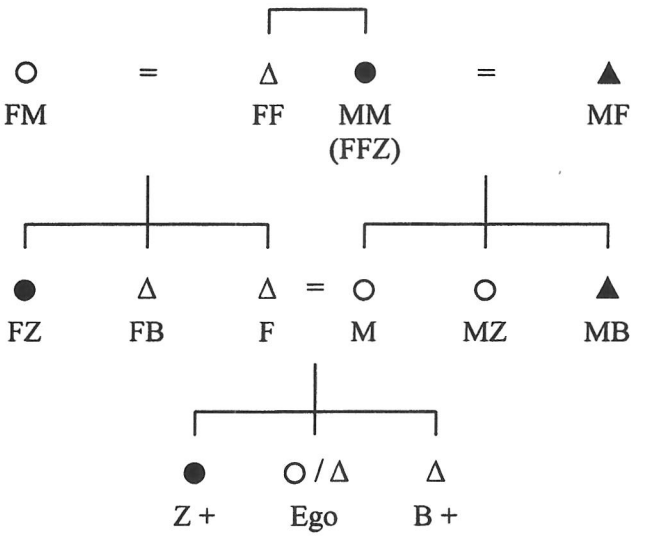

Diagram C. Relationships covered by KAKA in a patrilineal filiation.

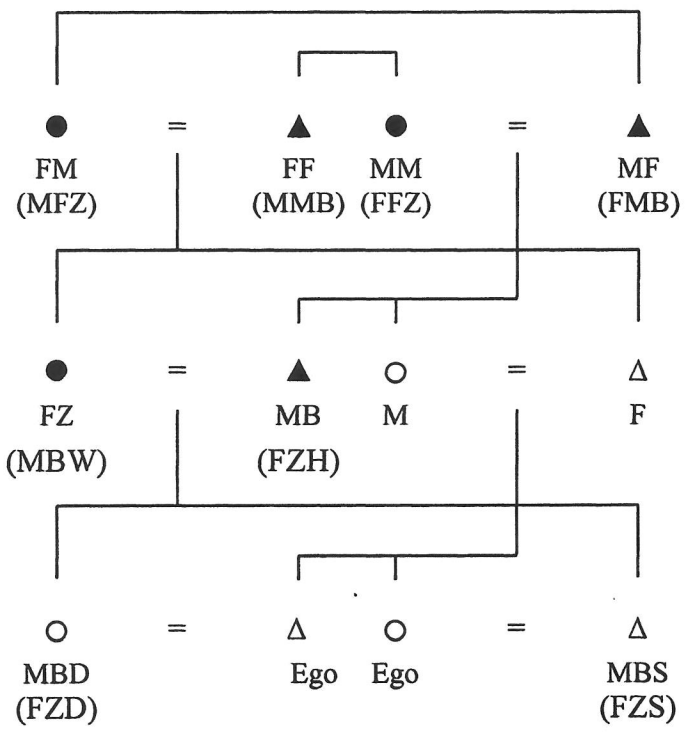

Diagram D. Cross-cousin marriage.

3.2.4. The feminine elders of the father's clan?

As previously noted, the feminine series GdM, FZ and Z+ is structurally analogous to the masculine series GdF, MB, B+. For reasons similar to those exposed in section 3.1.2, one has to consider that this feminine series designates the feminine elders of the father's group: the father's sister FZ and the father's mother FM in a matrilineal filiation (diagram B), the elder sister Z+, the father's sister FZ and the mother's mother MM in a patrilineal filiation (diagram C).

The question is now: were these masculine and feminine elders, apparently members of different exogamic groups, married to one another? Two series of arguments suggest they were.

At generation + 2 first, KAKA designates all grandparents in many languages and thus clearly refers to conjugal relationships. Furthermore, the grouping of the mother's mother's brother with the father's father (MMB=FF) in some KAKA's reflexes points to a marriage between FF=MMB and FM=MFZ, which is an expression of cross-cousin marriage at generation – 2[12] (diagram D).

At generation + 1 the frequent grouping of the father's sister's husband FZH and the mother's brother MB in many reflexes (Australian, Amerind) points to a marriage between the mother's brother MB and the father's sister FZ, which is also an expression of cross-cousin marriage at generation + 1.

3.2.6. A possible origin for all kinship systems

Our model opens into several types of kinship systems.

In the case of patrilineal filiation, it is compatible with Omaha type systems; in the case of matrilineal filiation, it is compatible with Crow type systems. These transformations, as far as KAKA is concerned, would entail the naming of additional positions. Lowie and Radcliffe-Brown after him were the first to emphasize how certain types of kinship systems, notably the Crow and Omaha systems, could derive

[12] Cross-cousin marriage is a widespread institution. In its broader sense it means that marriage between FZS, FZD, MBS and MBD is practiced at each generation.

their architecture from the fact that ego calls all members of one lineage (except his own) or clan with just two terms, one for the feminine relationship, one for the masculine. Lowie (1934: 109) ascribed these semantic features to the clan's effect on the kinship nomenclature, whereas Radcliffe-Brown (1941: 9-17 and 1956: 68-88) ascribed them to a general principle of « lineage solidarity ». These Crow and Omaha systems show an almost perfect adequacy between the members of a clan and the class of relatives designated by a single term. In the Omaha 3 system for example, all the feminine members of ego's mother's clan, such as MZ, MBD, MBSD, MBSSD, are ego's « mothers » and all masculine members of the same clan, MF, MB, MBS, MBSS, MBSSS, are considered ego's « mother's fathers » MF.

In other respects, the anthropological model, as long as it is compatible with marriage between two groups (see section 3.2.6 above), can also be the starting point for the Dravidian system. Generating a Dravidian system from a system expressing groups of kinmen according to their age implies its splitting into generation levels. This splitting would entail marriage inside one generation between cross-cousins (diagram D). The consequence as regards terminology would be the reduction of the KAKA's designations to only one generation and the invention of terms clearly differentiating each of the remaining relationships of the former KAKA series.

3.3.5. Conclusion of part 3

Our conclusion is that KAKA may have referred to masculine elders belonging to the mother's group and feminine elders of the father's group. There are also indications that these two groups, supposedly exogamic, were intermarrying groups.

4. CONCLUSION AND PERSPECTIVES

We have established that KAKA referred primarily to masculine elders on the mother's side and possibly to feminine elders on the father's side. This semantic grouping entails very important consequences regarding the nature of the Proto-Sapiens kinship system, the type of society that can be inferred from it, and the possible structural transformations of this ancestral terminology into other types of systems.

What this classificatory series suggests is that sex recognition, age of individuals with respect to ego, along with their membership to a group – that one supposes was a filiation group – must have been the essential features that the archaic terminology was designed to express. Filiation group means that "blood ties" were formally recognized, not individual kinship relationships. And as the individual relationships were not yet formally recognized, the number of terms that the system comprised was probably very limited. This system is certainly at the origin of the age differentiation (elder versus younger) that has been observed at different generation levels within all the different existing kinship systems.

This first lexical and structural insight into the ancestral system gives substantial credit to views expressed in the past, notably by Rivers (1907: 319-322) about the double nature of the ancient "classificatory" systems, expressing both consanguinity and status[13]. Rivers did not specifically address a time frame within human prehistory; moreover, as his theory rested on scanty ethnological evidence, it has remained merely speculative until now. But the situation is rapidly changing, as the structural and semantic

---

[13] In his well-known article about the origins of the classificatory system Riversassumed that *"at the time the classificatory system had its origin, the custom of exogamy was already in existence,"* and that this system *"was in its origin expressive entirely of status. The terms would stand for certain relations within the group to which only the vaguest ideas of consanguinity need have been attached."* But he also admitted that there were *"definite evidence of the double nature of the classificatory system as an expression of status and of consanguinity, and definite indications of a mode of evolution of the systems by which they are coming to express status less and ties of consanguinity more."*

properties of the ancestral system can be drawn using the combined evidence of hundreds of languages belonging to a range of macro-phyla.

What emerges from these remarks at the social level is that the custom of exogamy, in the simple form of two intermarrying groups (classes or moieties), as well as status based on age and sex, were already active factors shaping the *Proto-Sapiens* society.

Possible lines of evolution (or logics of transformation) are to be drawn, starting from what appears as a system expressing status based on age and moiety membership, to systems where clan membership is more central (like the Crow-Omaha systems), or systems that are regulated by the succession of generations and cross-cousin marriage (like the Dravidian systems).

A first significant step has been taken towards extensive knowledge of the Proto-Sapiens kinship system, and a blow has been dealt to an opinion that generally prevails within the social sciences: the supposed impossibility of investigating the social condition of prehistoric man[14]. Moreover, a considerable amount of data remains unexploited within ethnological literature, singularly with regard to "nursery words," whose misinterpretation has already been emphasized. This makes a fairly complete lexical and structural account of the system as a thorough understanding of paleolithic *Homo sapiens* society a realistic goal and a thrilling task to undertake in the years to come.

REFERENCES

ALLEN Nick J. 1998. "The Prehistory of Dravidian Type Terminologies," *Transformations of Kinship*, Washington: Smithsonian Institution Press.

BENGTSON John D. & Merritt RUHLEN. 1994. "Global Etymologies, " in RUHLEN 1994b.

GODELIER Maurice, TRAUTMANN Thomas R. & TJON SIE FAT Franklin E. 1998. "Introduction," *Transformations of Kinship,* Washington: Smithsonian Institution Press.

IVES John W. 1998. "Developmental Processes in the Pre-Contact History of Athapaskan, Algonquian and Numic Kin Systems," *Transformations of Kinship,* 94-139, Washington: Smithsonian Institution Press.

KRYUKOV M. V. 1998. "The Synchro-Diachronic Method & the Multidirectionality of Kinship Transformations," *Transformations of Kinship,* 294-313, Washington: Smithsonian Institution Press.

LEVI-STRAUSS Claude. 1981. *Les structures élémentaires de la parenté*, sixième tirage, Paris-La Haye : Mouton.

LEVI-STRAUSS Claude. 1956. "The family," *Man Culture and Society*, 261-285, ed. H.L. Schapiro, New York: Oxford University Press.

LOUNSBURY Floyd G. 1964. "A Formal Account of the Crow-and Omaha-Type Kinship Terminologies," *Explorations in Cultural Anthropology. Essays in Honor of George Peter Murdock*, New York : McGraw Hill.

LOWIE Robert H. 1934, et al. 1960. "The Omaha and Crow Kinship Terminologies," *Verhandlungen des XXIV. Internationalen Amerikanisten-Kongresses*, 103-108, Hamburg 1934: Friederichsen de Gruyter and *Lowie's Selected Papers in Anthropology,* 100-110, Berkeley, 1960: University of California Press.

MAYER-DURLACH Theresa. 1928. *The Relationship Systems of the Tlingit, Haida and Tsimshian,* New York: American Ethnological Society.

---

[14] Claude Levi Strauss (1956: 266): "*of the type of social organization which prevailed in the early stages of mankind, we know very little, since the remnants of man during the Upper Paleolithic Period of about 50,000 years ago consist principally of skeletal fragments and stone implements which provide only a minimum of information on social customs and laws.*"

MORGAN Lewis H. 1871. *Systems of Consanguinity and Affinity of the Human Family.* Washington: Smithsonian Institution.

MORGAN Lewis H. 1877. *Ancient Society, or Researches in the Lines of Human Progress from Savagery through Barbarism to Civilization.* London: Macmillan

MURDOCK George P. 1957. "World Ethnographic Sample," *American Anthropologist* LIX, 664-687.

MURDOCK George P. 1967. "Ethnographic Atlas: A Summary," *Ethnology*, vol VI, 2, 109-236.

RADCLIFFE-BROWN Alfred R. 1941. "The study of Kinship Systems," *Journal of the Royal Anthropological Institute of Great Britain and Ireland*, LXXI, 1-18.

RADCLIFFE-BROWN Alfred R. 1952. *Structure and Function in Primitive Society,* London: Oxford University Press, second impression London1956: Cohen & West ltd.

RADIN Paul. 1931. "Mexican Kinship Terms", *University of California Publications in American Archaeology and Ethnology*, 31, 1, 1-14.

RIVERS W. H. R. 1907. "On the Origin of the Classificatory System of Relationships,"*Anthropological Essays presented to E. B. Tylor*, Oxford: Clarendon Press.

RUHLEN 2000a: see part I

SEDAT S. Guillermo. 1955. *Nuevo Diccionario de las lenguas Kekchi y Espanola*, Chamelco, Alta Verapaz : Talleres de la typografia nacional de Guatemala.

SHIROKOGOROFF Sergei Mikhailovitch. 1929. *Social Organization of the Northern Tungus*, Shanghai: Commercial Press.

TOOKER Elizabeth. 1992 "Lewis H. Morgan and His Contemporaries," *American Anthropologist*, 94, 357-375.

TRAUTMANN Thomas R. 1981. *Dravidian Kinship*, Cambridge (Engl), New York: Cambridge University Press.

WORDICK Frank J. F. 1970. *A Generative Extensionist Analysis of the Proto-Indo-European Kinship System With a Phonological and Semantic Reconstruction of the Terms*. Ph.D. thesis, Ann Arbor (Michigan).

Was the First Language Purposefully Invented?

John M. Saul
3 rue Bourdaloue, Paris

In this work, the word "language" is employed to denote "all that which permits human beings to exchange complex ideas."

The subject matter of the very first complex exchange, of the "first conversation," must remain a matter of speculation. This admitted, it seems a near certainty that early exchanges must have touched on the subject of death and what might be done about it. Let us then assume that complex ideas about death were exchanged from the outset or very shortly thereafter, in times when there was just one language in existence anywhere in the world (perhaps employed by only two individuals). By the nature of things, the time-scale implied is less than a single generation for no one is primarily concerned with the immortality or lack thereof of his descendants.

Since neither the inevitability nor the ubiquitousness of death is self-evident, it must be learned, and aspects of such early conversations must have dealt with the nature of death and how it might be avoided. In the course of the totality of such early conversations, a convincing solution for the problem of death either was, or was not, found.

At least three lines of evidence exist indicating that a seemingly compelling solution to the problem of death *was* found. The first type of evidence is simply the ubiquity of religion in all subsequent times and places and the near-ubiquitous belief that the dead go to Heaven Above. (A common variation has the dead first going downwards for preparation before the ultimate upwards journey, hence a three-tiered cosmology.)

A second line of relevant evidence seems to be detectable wherever it is sought and may thus also be ubiquitous. This is the notion, and presumably the practice, of organizing the affairs of mankind on Earth Below in a manner hoped and held to reproduce or reflect the Heavens Above.[1] The intent would appear to have been to project the supposedly undying essence of Heavenly Beings into the lives of mankind.

A few examples are now given, though many more are available:

In ancient Mesopotamia, the "informing thought of the Sumerian world feeling" was "What is above is below."[2] Similarly, the Chinese held that "everything terrestrial" had "its prototype, its primordial cause, its ruling agency in heaven."[3] In the West the same idea prevailed in the most familiar saying of the Western alchemists: That which is above is like that which is below and that which is below is like that which is above.[4] It thus appears that a poorly understood backwater of the Western heritage and a major tributary of Chinese culture have tapped the same source of inspiration as does the mainstream of Sumerian thought. This

---

[1] J. M. Saul, "'As it Is Above, So Shall it Be Below': The Blueprint of Civilization" in *Archaeoastronomy* (*The Bulletin of the Center for Archaeoastronomy*), vol. XI -1989-1993, College Park, MD (1994) pp.104-107.

[2] Alfred Jeremias, cited by Joseph Campbell, *The Mythic Image,* Princeton University Press (1974) p.87.

[3] Ernest John Eitel, *Feng Shui,* Pentacle Books, Bristol (3rd edition, 1979) p.10; (first published in 1873). The Taoist text, the *I-Ching,* notes that the sage "...looking up, contemplates the brilliant phenomena of the heavens, and, looking down examines the definite arrangements of the earth... He traces things to their beginning, and follows them to their end... thus he knows what can be said about death and life..." (A. Bulling, *The Meaning of China's Most Ancient Art,* E.J. Brill, Leiden (1952) p.12).

[4] The alchemical citation comes from *The Emerald Table,* called "the bible of the alchemists"; see Frances A. Yates: *Giordano Bruno and the Hermetic Tradition,* Routledge and Kegan Paul, London (1978) p.150.

suggests an very ancient common origin for these three cultures. Likewise, in the *Zohar* (a Judaic mystical text of the 13th century which draws on much older sources), we find that "the inferior world is a reflection of the superior." Similarly, the Micmac Indians of the Canadian Maritime Provinces hold that "In all things as it was and is in the sky, so it is on earth,"[5] while in Colombia, many Indian cultures "conceptualize the sky as a blueprint for past, present and future occurrences on earth... ."[6]

Homology – here referring to a common historical origin in remote pre-Sumerian times – would seem to be the cause of the appearance of this same notion in different times and lands.

With these two lines of reasoning in mind, and the notion that the underlying intellectual and religious purpose may be to permit Earthbound mortals to beat death by acquiring the secrets of the Immortal Gods, a third and a closely related fourth line of evidence take on new importance, namely the observation that astronomy is everywhere the oldest of sciences and that astrological beliefs have been present in all times and lands.

To resume: language came into being; the awful matter of death was discussed; and a solution to it was seemingly found in the form of an "astro-religion" designed to obtain the supposed secret of Celestial Immortals. (The secret of the gods was immortality, not omnipotence; Jupiter/Zeus was unable even to manage his domestic affairs.)

This historical reconstruction is consistent with either of two scenarios concerning the origin of language.

Scenario 1: Language was invented once (or more than once(??)) and the matter of death was discussed for a long time and in many places before the solution of "As Above, So Below" was devised. While such talks were going on, language(s) differentiated. (I question whether language was invented more than once. This is because good ideas spread so rapidly that almost no time is left for the independent inventor. This constitutes the ultimate diffusionist argument, and I think it is a general rule, valid across a number of fields: good ideas travel well. An example: postage stamps were in use in Hawaii, Peru and Afghanistan less than a generation after the Penny Black.)

Scenario 2: Language was invented once, perhaps with the precise intent of discussing the problem of death, and possibly inspired by the cosmological-astronomical-religious insights of its inventor. The idea of organizing human affairs As Above, may have been present in the mind of the inventor of language even before he invented it. In this scenario, the matter of death was discussed by members of the first generation of language users.

Languages can be exceedingly frustrating to compare. To some extent this is because resemblances which appear evident on using one methodology may be undetectable when a different method is applied. A way out of this difficulty may be available in the context of

---

[5] See Stansbury Hagar, "The Celestial Bear" in *Journal of American Folk-lore,* vol. XIII, no.49 (1900) pp.92-103. p.95. "Mi'kmaq" is the modern spelling.

[6] Gerardo Reichel-Dolmatoff as cited by Renée Opperman, "The S[outh] W[estern] A[nthropological] A[ssociation] Symposium 'Astronomy in Anthropology'" in *Archaeoastronomy* (*The Bulletin of the Center for Archaeoastronomy*) vol. IV, no.1, College Park, MD (Jan.-Feb.-Mar.1981) pp.4-5.

Scenario 2. The solution consists of extending Alfred L. Kroeber's concept of Stimulus Diffusion.

According to Kroeber (1876-1960), *ideas* diffuse or travel far better than *objects*. Thus, for example, the idea of making a pot may survive an intercontinental voyage that no real pot would. On the other hand, ideas are far less specific than objects and the new pots manufactured on a foreign shore weeks or generations later might be very different indeed from the *ur-pot* made back in the land where the voyage had commenced. Likewise, an abstract idea, lacking any physical manifestation may also travel well: "communism," "psychoanalysis" and "channel surfing" are examples.

When Kroeber's concept is applied to the diffusion of the seemingly death-defeating idea "As Above, So Below", matters would have functioned on extremely compressed scales, both in time and distance. Thus, the third person ever to receive the idea of projecting Heaven on to Earth would have been the recipient of a diffused message (in Kroeber's sense). Yet, even standing right next to one or both of the two first persons to exchange ideas on this matter (which is assuredly where he did stand), he would have gotten some things wrong, "wrong" in the sense that it was not precisely what the speaker(s) had intended.

None of the three or more people involved at this stage would have been a stickler for grammar; they would have had more important things in mind. At this stage, vocabulary would have been far more important. At the outset, 1 word = 1 concept and in context of Scenario #2, the first words would have to been related to concepts that were applicable to the problem overcoming death.

Thus, as a consequence of short-range stimulus diffusion, languages may have begun to diverge even in the very first generation of speakers. (This is perhaps as should have been expected: a comparison with the Cambrian Explosion may be in order, as well as S.J. Gould's broader arguments for early experimentation and later standardization. This may be why new languages are easily formed but not new language phyla.)

If the approach proposed here has merit, it might be testable by comparisons of terms such as those in the list which follows. These terms have been selected from the traditions of religions and mythologies worldwide. It is suggested that three sets of vocabulary comparisons be made at the outset i) among languages thought to have come into being at moderate northern latitudes, ii) among languages thought to have come into being in the tropics, and iii) among languages of the southern hemisphere not clearly relatable to members of either of the two previous groups. Linguistic considerations, as such, are not involved in this suggestion but rather, the fact that the sky over the tropics exhibits systematic differences with that over temperate regions. In a first effort, languages of the far north, where the sky is again different, should be omitted.

Sky
Heaven
Earth
Above
Below
Sky Father
Earth Mother
Lifeblood
Ochre
Menstrual blood
Blood
Male
Female
Sun
Springtime
Rain (from Above)
Milky Way

Stone Ax (which splits Heaven at Milky Way)	Bee
River	Honey
Star	Chrysalis
Constellation	Frog
Pole star	other metamorphosing creatures
Vega	*Scorpio*
Thuban	*Taurus*
Polaris	*Orion*
Lyra	Scorpion
Draco	Bull
Ursa Major	Hunter
Pleiades	Dog
Hyades	Sirius
Lyre/Bird	Jupiter, Venus, Mars, Saturn, Mercury, Moon
Snake	Gold
Bear	Penis
other hibernating animals	Vagina

Once one is willing to consider the possibility that all human traditions, including the use of language, might be threads of a single multi-stranded story of Paleolithic authorship, it is no longer difficult to spot supporting evidence. No specialized training or expertise is needed. It is sufficient, for example, to take cognizance of the titles of some relatively obscure books such as *Phœnician origin of the Britons, Scots & Anglo-Saxons,*[7] *Hebrewisms of West Africa,*[8] *Celtes et Hébreux,*[9] or *Black Athena: The Afroasiatic Roots of Classical Civilization,*[10] Similar indications that all belief had had a single historical origin is evident in a report from 16th-century Peru, wherein Father Joseph De Acosta inadvertently indicated the true nature of his ubiquitous adversary, claiming that

> ...whoso shall neerely looke into it, shall finde this manner which the Divell hath vsed to deceive the Indians, to be the same wherewith hee hath deceived the Greeks and Romans, and other ancient Gentiles, giving them to vnderstand that these notable creatures, the Sunne, Moone, Starres and Elements, had power and authoritie to doe good or harme to men.[11]

The diversity of odd-sounding cross-cultural claims reported in print is greater than most readers are likely to suspect. In many cases, observations have been tied to theories that

---

[7] L[awrence] A[ustine] Waddell, *Phœnician Origins of The Britons, Scots and Anglo-Saxons,* Luzac & Company, London (1931).

[8] Joseph J. Williams, S.J., *Hebrewisms of West Africa: From Nile to Niger with the Jews,* Dial Press, New York (1930).

[9] A. Tollaire, *Celtes et Hébreux: La Légende et l'Histoire,* Tome I, Société d'Editions et de Publications Scientifiques, Paris (1900).

[10] Martin Bernal, *Black Athena: The Afroasiatic Roots of Classical Civilization;* vol.1: The Fabrication of Ancient Greece 1785-1985, Free Association Books, London (1987).

[11] Joseph De Acosta, *The Natural and Moral History of the Indies,* translated by Edward Grimston in 1604, with notes and introduction by C.R. Markham, Hakluyt Society, London (1880) vol.II, pp.305-306; "elements" refers to atmospheric phenomena.

assign outlandish or messianic roles to one people or another. A minute sampling of such reports (many cranky, but all containing some valid historical data) includes claims for:

- An origin of Finnish mythology in Mesopotamia;[12]
- The invention of Greek astronomy in the Caucasus;[13]
- A Pictish-->Scottish-->Swedish diffusion route to which has been prefixed the notion that the Picts may have been Algonquin in origin;[14]
- The opposite, a sort of Viking-Kikapoo connection with "the Algonquin language" derived from Old Norse;[15]
- South Americans from Polynesia, and
- Polynesians from South America;
- "Egypt for the mouthpiece and Africa as the birthplace" of British, Hebrew, Akkado-Assyrian and Maori civilizations (4 vols.);[16]
- Egyptian origins from the Mayan "world mother culture";[17]
- The foundation of China as an Egyptian colony;[18]
- The idea that "Everything, absolutely everything, is of Indian Origin";[19] which may seem difficult to reconcile with the notion that
- Belgian Gaul was "the original center and creator of civilization [with] the Flemish language [as] the world's first and richest";[20]
- Citadel-builders of Mediterranean origin in the Mato Grosso;[21]
- Belief that an unknown Christian had preceded the Spanish in Mexico, and
- Montezuma's conviction that the Spanish king was descended from the sacred Quetzalcoatl who had sailed away to the East long ago, promising a Return...
- The Galla of the Ethiopian highlands as descendants of the Gauls;[22]
- Traces of Bushman in Indo-European languages;[23]
- Tantric philosophy as "closely aligned to the law" of an Australian Aboriginal people,[24] and
- a neat Navajo-Nepali nexus.[25]

---

[12] M. Oldfield Howey, *The Cat in Magic, Mythology, and Religion,* Bracken Books, London (1989) p.50.

[13] C.G. S[chwartz], *Recherches sur l'origine et la signification des constellations de la sphère grecque,* translated from Swedish text, Migneret, Paris (1807).

[14] Charles H. Seaholm, *The Kelts and the Vikings,* Philosophical Library, New York (1974).

[15] Reider T. Sherwin, *The Viking and the Red Man: The Old Norse Origin of the Algonquin Language*, Funk and Wagnalls, New York (1940).

[16] Gerald Massey, *A Book of the Beginnings,* 2 vols. (1881), and *The Natural Genesis,* 2 vols. (1883), all published by Williams and Norgate, London.

[17] Augustus and Alice Le Plongeon as quoted or paraphrased by George E. Stuart, "A Pair of Mayanists" (book review) in *Science,* vol.244 (19 May 1989) pp.864-865.

[18] Anonymous, *De inscriptione quadam Aegyptiaca Taurini inventa et characteribus Aegyptiis olim et Sinis communibus exarata idolo cuidam antiquo in Regia Universitate servato*, N & M Palearini, Rome (1761).

[19] Friedrich Schlegel, letter to Ludvig Tieck (15 Dec. 1803) as cited in Bernal, *cit.*. pp. 230, 479.

[20] Tollaire, *cit.*, p. 418.

[21] Sought in the 1920s by Colonel Percy Fawcett who disappeared in the attempt.

[22] R.P. Martial de Salviac, *Les Galla: Grande Nation Africaine: Un peuple antique ou une colonie gauloise au pays de Ménélik,* F. Plantade, Cahors ("1900" [1901]), widely read by missionaries and administrators in Rwanda, Burundi and elsewhere.

[23] Roman Stopa, *Structure of Bushman and its Traces in Indo-European*, Curzon Press, London (1972).

[24] Biggibilla, a Australian artist, cited in *International Herald Tribune* (31 July 1995).

[25] Noted with astonishment in the mid-1950s by a Nepali exchange student.

If supernatural explanations are excluded, the only straightforward way to accommodate the wonderful and bulky totality of valid elements in such claims is by attributing a single ultimate origin to all civilizations everywhere whatever their "levels." This origin would have been long ago, though not at "the beginning of history." It would have been at the beginning of prehistory, at the very instant "something extra" was first added to the purely biological heritage of the genus *Homo* when its members, by use of language, began to exchange complex ideas as well as genetic material.

The Numeral System of Jarawa Andamanese

Michael Witzel[1]
Harvard University

Recently, R. Senkuttuvan of the Anthropological Survey of India has published a booklet on the so far very little known Jarawa Language of the Andamans (Senkuttuvan 2000). It contains a detailed phonetical discussion, a few notes on grammar, and a list of some 500 words.[2] This is a welcome addition to our meager knowledge of the Southern Andaman languages.[3]

One point drawing attention is the curious system of numerals employed by the Jarawa. Senkuttuvan gives numbers 1-44 only, as follows.

1. ōya
2. nāya
3. ikkanddeyilo
4. māla
5. kuṭṭu
6. otti
7. ḍabō
8. cāre, chāre

---

[1] ASLIP President, Wales Professor of Sanskrit, Harvard University

[2] The numbered list, more or less in the order of the Indian alphabets, from *a* to *v/y* has 483 words, but the extensive section of phonetical analysis contains a few more not listed in the vocabulary. Also, there is a certain amount of hyper-phoneticism in Senkuttuvan's list, so that the same word occurs several times with slightly different spelling. Especially, long and short vowels are confused or misprinted, as are dental and retroflex consonants; I suspect that Senkuttuvan was led by his Indian (Tamil) perceptions of Jarawa sounds. Actually, he says: "The present study about Jarawa's language has shown linguistic resemblance with Dravidian families ... five percent of root words ... are found as similar" (p.2), or: "Jarawa language ... comes under Dravidian feature" (p.29), and he --rather loosely-- compares 27 Jarawa words with Tamil ones (p. 4-6). His use of the apostrophe (as marker of separate syllables?) is inconsistent as well; apparently, it is not used for glottal stops or laryngeals. A phonematic spelling will result in a lower number of new words. -- The word list includes a few loans (e.g., *kūttā* 'dog', *pēpē* 'paper') and some new coinages such as *ḍāvdhōcca naiyile* 'scooter', *alēvā-alēva* 'wrist watch', *ennō cāṭṭiye* 'lorry' (apparently from *"body" enno* + "house" *caṭṭā*).

[3] A slightly older list of publications on the Andamans is that by N. Zide and V. Pandya, A bibliographical introduction to Andamanese linguistics. *JAOS* 109, 1989, 639-651. See also Nair, V.S., A Note on the Language of the Jarawa. *Bulletin of the Anthropological Survey of India*, Vol. 28, 1979, 17-35; Sarkar, J. *The Jarawa*. Calcutta: Seagull Books 1990; Dasgupta, D. and S.R. Sharma, *A Handbook of the Onge Language*. Calcutta: Anthropological Survey of India 1982. -- For a general overview of the islands, see:
http://andaman.nic.in/C_charter/Dir_tw/pri_tri.htm, and especially on the Jarawa tribe: Vishvajit Pandya, Hostile Borders on Historical Landscapes: The Placeless Place of Andamanese Culture. Asian Studies Institute, Victoria University of Wellington, Publications:
http://www.vuw.ac.nz/asianstudies/publications/working/hostile.html (with a useful bibliography); for recent conservation/protection developments in the Southern Andamans, see:
http://news.bbc.co.uk/hi/english/world/south_asia/newsid_1364000/1364180.stm. and
http://www.flonnet.com/fl1912/19121310.htm.

9. pōṭṭe <delete: māṛe>
10. māre
11. pāṇḍi
12. ēle
13. tī, mobiya
14. lō
15. tittō, tiṭṭo
16. lnbu (*inbu?)
17. dhulḷe
18. mē
19. urā
20. -
21. onni, mē
22. -
23. dō
24. ōppo
25. tiṭṭo, tittō
26. mēvu
27. ṭaṅku
28. tiṭṭō
29. illi
30. care, cāre
31. podi
32. ḍōbho
33. cāre
34. pōṭṭe
35. mare
36. -
37. u!e (*uḷe, ule?)
38. vē
39. lōvi
40. littō (*titto?)
41. vimbu
42. tūle
43. mēv
44. yāv

The list defies any immediate attempt at analysis; there seems to be no cogent system behind it. The usual ones, such as those based on systems of 2, 3, 5, 10, 12, 20, etc. (Blažek 1999: 327 sqq.) do not work here. On closer inspection, one will notice that the numbers start over again with number "32", though with forms that differ from the earlier set by a few variations in vowels, consonants or by the addition of a sound. Thus, 10. *māre* : 35. *mare*; 17. *dhulḷe* : 42. *tūle*; 7. *ḍabō* : 32. *ḍobho*; 18. *mē* : 43. *mēv*; 14. *lō* : 39. *lōvi.*

7. ḍabō
8. chāre, cāre
9. pōṭṭe
10. māre
11. pāṇḍi
32. ḍōbho
33. cāre
34. pōṭṭe
35. mare
36. -

12. ēle
13. tī, mobiya
14. lō
15. tittō, tiṭṭo
16. lnbu (*inbu?)
17. dhulḷe
18. mē
19. urā
20. -
21. onni, mē
22. -
23. dō
24. ōppo
25. tiṭṭo, tittō
26. mēvu
27. ṭaṅku
28. tiṭṭō
29. illi
30. care, cāre
31. podi
37. u!e (*uḷe, ule?)
38. vē
39. lōvi
40. littō (*titto?)
41. vimbu
42. tūle
43. mēv
44. yāv
45...

Even this observation does not lead to an immediate solution. Which known system, based on body parts (such as 5 fingers, 10 fingers, 20 fingers and toes), would lead to one based on a repetition starting with 32? A hint is provided by those systems that include not just fingers and toes, as most counting systems do, but also other body parts.

Some have recently been described and analyzed by V. Blažek (1999: 325 sq.). The Papuan language Telefol starts with the little finger of the left hand = 1, ring finger = 2, etc., fist = 6, forearm = 7, elbow = 8, biceps = 9, shoulder = 10, side of the neck = 11, ear = 12, left eye = 13, nose = 14, and then continues downward on the right side: right eye = 15, ear = 16 etc. The Papuan languages Kombi, Korowai, and Wambon have virtually the same system(while Aghu has the more standard 'hand and feet' system of 20).

A similar system is reported by J. Lynch (1998: 250 sq.) for the Papuan language Kewa. Though it has a numeral system based on four (*laapo* '2', *kode laapo* '6, etc.), it also has another counting system, based on body parts, such as the Papuan systems already mentioned. As Lynch and D.C. Laycock explain, this second system should be called a "tallying system" as it is used to count valuables and to enumerate calendrical events. These systems "are used only for direct counting or 'mapping' of a set of objects against some other measuring code. There are no 'numerals' in a tallying system, so that one may not receive a reply to the question 'how many' or find the points of the tally-system qualifying nouns, as do true numerals (Laycock 1975: 219)." Interestingly, such tally systems proceed from "the fingers on one hand, up the arm, across the face or the chest, and down to the fingers of the other hand."[4]

---

[4] This system reminds of other tallying and arrangement systems, such as the use of a number of twigs in order to remember where exactly in the complicated arrangement of variations in singing the Vedic Sāmans one has arrived; or the medieval "palace of knowledge" and the fish skeleton used in the Pacific to "store" knowledge, see Witzel, How to enter the Vedic mind? Strategies in Translating a Brāhmaṇa text. *Translating, Translations, Translators From India to the West.* (Harvard Oriental Series, Opera Minora, 1) Cambridge : *Harvard Oriental Series* 1996.

However, even this kind of system does not account for the Jarawa one of base 32. Its numbers repeat only from 7 onwards (7 ~ 32, 8 ~ 33, etc.) while 1-6 have no counterparts in the published word list.[5] If one would begin, for example with the left hand fingers and move up to the head, on would expect the system to start replication with no. 1 (*oya*) ~ no. 27 (something like **aya, oya,* etc., not, as attested, *ṭaṅku*).

In order to make sense of the Jarawa system, one has to begin with the head, for example with a hypothetical 1= skull or forehead, 2 = eyes, 3 = nose , 4 = ears, 5= mouth, 6 = neck. An admittedly vague hint that this guess may be correct is supplied when one takes a look at the names of the various parts of the head:

1. *ōya*	~	*-eyippo*[6] 'eye', *-ēpu* 'eye ball'??
2. *nāya*	~	*-yanbō, -ñānbo, -nāṭpo,* 'nose'; *necciya* 'forehead'
3. i*kkandeyilo*	~	*-kkuva* 'ear'?
4. *māla*	~	*-mu* 'mouth'
5. *kuṭṭu*	~	*-kītto* 'neck', cf. *kōṭṭā* 'chest'
6. *otti*	~	*-bīttā* 'jaw'??

Only then the tallying system starts with the two sides of the body: hyothetically, the left shoulder bone (7, *ḍabo*), shoulder, upper arm, elbow, lower arm, wrist, hand (12, *ele*) and the three phalanges each of the five fingers (13-31), perhaps ending with the first phalange of the thumb: 31 *podi* , cf. *pōttā* 'first finger'.

From 32 onwards one repeats this for the right arm, theoretically up to 53, though Senkuttuvan has recorded only the numbers up to 44.

As mentioned above, there are some inconsistencies, such as the double numbering of no. 13, and some obvious mistakes such as *mare* for no. 9 and 10. The inconsistencies in double numbering (13. *tī, mobiya*; 21. *onni, mē*) may be due, in part, to the interferences of the actual numbering system with the tallying system. However, there also is some internal proof for the consistency of the tallying system. For example, the last phalanges of the middle finger and of the index finger are named in the same way (25. *tiṭṭo, tittō* : 28. *tiṭṭō).* (But, this does not explain the same name for the middle phalange of the small finger: 15. *tittō, tiṭṭo*!).

Apart from the fact that this makes for an interesting study of a little investigated field, there is larger question involved, namely: is the very idea of tallying systems in Papuan and Andamanese a further indication of their ultimate relationship as Indo-Pacific languages?

***

As the new booklet of Senkuttuvan an important addition to our knowledge of Indo-Pacific, I submit the items recovered from it for a Swadesh list (including Senkuttuvan's phonetic over-specifications). The (closely related) Önge words (from Portman 1887) are given in brackets

---

[5] Some of the 'numbers' 1-6 may be the actual numerals. Note the suffix (counting word?) *-ya* in : 1 *ō-ya* , 2 *nā-ya*, and in the second form of *13 mobi-ya*. The co-existence of the numeral and tally system see below. -- It also is possible that Senkuttuvan was misled about some of the numbers, especially 1-6, and could not distinguish them from tallying numbers.

[6] Note that body parts usually start with *onnV-, unnV,* or *ennV-*, such as *onnō-lō* 'knee', *ōnni-nō* 'finger', *unni-ppō* 'thigh', *unnā-ḍa* 'tongue', *enna-gō* 'tooth', *ennō-lu* 'knee'. Differences in meaning, here as elsewhere, seem to be indicated by a sort of vowel or consonant *ablaut.*

[...]; (length of vowels is indicated by macron). Most North Andamanese words are clearly unrelated and are not given here.

1. I mī [mī]
2. thou nī
3. we māllā(v), mallāv(u)
8. not nāḍum; nāḍe [ēbāūbē]
11. one ōya [woiyā?]
12. two nāya [nīnāgā]
13. big oṭkalā; cannāccō; tottāṅtōḷā [nādē uyē]
15. small onnōttōn; pāli; poṇṇā (very short); ōññā (short) [baiai]
16. woman dhōy, dhōyi, oṭṭāyā (wife) [unyāōlē 'wife']
17. man dā (male child), ūṭṭu (big boy) [unyāgīlē]
19. fish nāppō, nābo, nābo; lāppō [cōgē]
20. bird nōghāliye; noguvā (chicken), navughā (hen); nōgha (duck); noga (peacock)
21. dog vēb; veb; dhuvughu (boar)
23. tree dha, ḍhāghu (also: coconut); ḍāṅ; nā (wood)
25. leaf bēbe, vēḍbō [bēbē]
28. skin pīl, onnī-ppil; onnī-ppīl; onnī-pfēl; unnā-ḍivu; tōttā (fruit)
29. flesh onna-tdiya (human), unni-ciṭbo (of leg)
30. blood cēyu(ly) (of pig)
31. bone uḷḷetā [īcindāngē]
35. tail yav, yāv (of dog)
37. hair ennō-ḍu; onna-kkottāṅtōdū; gōṭu (head hair); mōvḍu (pubic) [māūdē]
38. head muī (face); (onnē-)nēcciya (forehead, face) [önö tōlājībē]
39. ear enni-kkuvā; onnī-kkuva [īk quāgē]
40. eye enne-ccеṭbō; onne-ebbō; onnē-puḍūkka; onne-eyippō; īppō; onnē-pu (eye ball) [unījē boi]
41. nose eriyāppo; oñnī-ñānbo, onnī-yanbo; onni-nāṭpō; conni-ñanbō, mu [unīnyai boi]
42. mouth eru-mu; onni-mu
43. tooth enna-gō; onnā-gu; onna-hō; dēl [mākuē]
44. tongue ēna-dālu; unnā-ḍā [alāndāngē]
45. fingernail ennō-pētta; onnō-beyittā; eruvēḍā; māvumege; nobēdhā [mōbē dungē]
46. foot ēnu-p; onnū-k; onni-cci (leg); ḍeṭtā (dog leg) [mugē]
47. knee enni-ñanbo; ennō-lu; onnō-lō
48. hand enni-ppīt; onni-kkinnu, kiya (arm), unniḍoppayi uḷḷe (fist) unni-palna (palm) [mōmē]
49. belly unni-fēt/ṭ; onni-yōmbō; onni-fē, uṅni-fē
50. neck onnā-kīttō; oṇṇa-ṇḍū (back) [önāngitō]
51. breasts ghāgh (fem.); gāk (male nipple); ennā-kottā, onnē-kōttā (chest)
54. I drink īṇya, īnja, īñcā; īṇcō; nābovu (drinking) [īnjōbē]
55. I eat dīṭtā; ḍītta, onni-biyā [ēnīlö quālēbē]
57. I see onnibiyā
60. I sleep ēyāvuṭu dhūle (fut.); omuxā; ummāmē (sitting); dēppāle; dhūle (I sleep today, sleeping); dhūle [ōmōkābē]
61. I die besame

63. I swim ḍoppiccā (swimming) [quānē]
65. I walk ḍavu(g) vaiyyā (walking)
66. I come ayyōvāppa; vāyyā/vayya appa (come here) [īnai öbābē, önuquāngēmē]
67. I lie (down) dēppā ledhūle, dhūle (sleep, lie in bed) [gain yībē; ōmōkābē 'sleep']
68. I sit ennāpdeyā; deghu [unāntököbē]
69. I stand tokkāpdē; dōkkāṭdiyā (up) [dōkābē]
72. sun ēvu; likkā (paṅgaṅ, bāṅna(n) 'sky') [ēkē; bēng nongē 'sky']
73. moon ḍabe, dābe
75. water īṅ (uḷḷeḷū 'sea') [īngē]
77. stone uḷḷīvu, uḷḷva [taiyī]
78. sand bīlu; [bēlai]
79. earth bēḷḷā (mud) [tutānō; tōngkutē 'clay']
82. fire duvēu, duvēv; dhūha [tukē]
88. green ḍhūnna, ḍhunna [tōtāndāngē]

***

Some features of grammar include (assembled mostly from Senkuttuvan's "few sentences" 2000: 27 sq.; my analyses indicated by hyphen):

Pronouns

mī	'I'	[mī]
nī	'you'	
mūc	'he'	
unne	'she'	
māllāv	'we'	
ōye?	'you?'	
avṭ	'they'	

Verbs: Present

mi	īṇ-ḍu	"I am taking a bath"
-	tīttīan	"I am going"
mūc	cēllāme kīkebbā	"he is singing'
unne	bēttātottōlā	"she is cutting her nail"
mālāvū/u	b(h)ēddu	"we are going"
mālāv(ū)	īñ-cō	"we are drinking"
mālavu dē	yyappu	"we dance"
avṭ(ṭ)ō ḍe/da	īn-ja/īñ-jcā	"they are drinking"
avṭ(ṭ)ō ḍa	bhēḍḍu	"they are going"
avṭ(ṭ)ō ḍa	dīttā	"they are eating"
avṭ(ṭ)o ḍa	īñcā/iñya	"they are drinking"
avṭ(t)o ḍa	yapping/yappu	"they are dancing"
av(u)ṭ ṭe	k-ettāye	"washing (the face)"
avṭ	b-ettāye	"washing (the hand)"

dēppā	le-dhūle	"I sleep" (today)
onnighī	yāppiu	"I dance"
	bheḍḍiya	"I go"
nā	ābbēllā	"I run" (sic!)
ōye	dītta	"you eat"
nī	ābbēllā	"you run"
mālā	dīttā	"we eat"
māla	caṭṭa	"going (they)" (sic!)

Past

ittā	lē-dhulē	"I slept here"
nī	besāme	"you died"
mālāv(ū)	besāmē	"we died"
mālavu	īñ-jō	"we drank"
avṭṭo de	bessami	"they were died(!)"
	bessame, paccāmē	"died" (bhezyā "death") [bēcāmēmē]
-	kīkkaṭṭu	"came (yesterday)"

Future

ēyāvuṭu	dhūle	"I will sleep"	[ōmōkābē]

Negative

	tīttā nādem	"I don't eat"
	ikkō nādēm	"don't beat"

Imperative

	vāyyā	"come"

Some verbs

Many verbs seem to end in *-ya*, or have the suffix *-taiya/-taiyē*, *et-tayē* 'brushing (soap on cloth)' (see *k-/b-ettayē; ḍiṭ-taya* 'soap patty for body'); *unnina-ya* 'to beat'; *ōḍa-ya*' cutting'; *ōkki-yā* 'throw'; *cāccā-lōṭ-tai-ya* 'jumping'; *dōkkāt-di-yā* 'to stand up'; *ḍavu(g) vaii-yā* 'walking'; *bheṭ-tai-yā* 'go' [*önī tötöbē, bujīöbē, lē gānlē*]

Bibliography

Blažek, V. *Numerals. Comparative-etymological Analyses and their Implications. (Saharan, Nubian, Egyptian, Berber, Kartvelian, Uralic, Altaic and Indo-European languages).* Brno: Masarykova Univerzita v Brne 1999

Laycock, D.C. *Observations on number systems and semantics. In: New Guinea area languages and language study. Vol. 1, Papuan languages and the New Guinea linguistic scene,* ed. S.A. Wurm. Canberra: Pacific Linguistics, C -38, pp. 219-233

Lynch, J. *Pacific Languages. An Introduction.* Honolulu: University of Hawai'i Press 1998

Portman, M.V. *Manual of the Andamanese Languages.* 1887; reprint: Delhi :Manas Publications 1992

Senkuttuvan, R. *The Language of the Jarawa.* Calcutta: Anthropological Survey of India 2000. pp. iv, 57